Soft-tissue anatomy of the primates: Phylogenetic analyses based on the muscles of the head, neck, pectoral region and upper limb, with notes on the evolution of these muscles

Article *in* Journal of Anatomy · June 2011

DOI: 10.1111/j.1469-7580.2011.01403.x · Source: PubMed

2 authors:

Rui Diogo
Howard University

Bernard Wood
George Washington University

Journal of Anatomy

J. Anat. (2011) **219**, pp273–359 doi: 10.1111/j.1469-7580.2011.01403.x

Soft-tissue anatomy of the primates: phylogenetic analyses based on the muscles of the head, neck, pectoral region and upper limb, with notes on the evolution of these muscles

R. Diogo and B. Wood

Center for the Advanced Study of Hominid Paleobiology, Department of Anthropology, George Washington University, Washington, DC, USA

Abstract

Apart from molecular data, nearly all the evidence used to study primate relationships comes from hard tissues. Here, we provide details of the first parsimony and Bayesian cladistic analyses of the order Primates based exclusively on muscle data. The most parsimonious tree obtained from the cladistic analysis of 166 characters taken from the head, neck, pectoral and upper limb musculature is fully congruent with the most recent evolutionary molecular tree of Primates. That is, this tree recovers not only the relationships among the major groups of primates, i.e. Strepsirrhini {Tarsiiformes [Platyrrhini (Cercopithecidae, Hominoidea)]}, but it also recovers the relationships within each of these inclusive groups. Of the 301 character state changes occurring in this tree, ca. 30% are non-homoplasic evolutionary transitions; within the 220 changes that are unambiguously optimized in the tree, ca. 15% are reversions. The trees obtained by using characters derived from the muscles of the head and neck are more similar to the most recent evolutionary molecular tree than are the trees obtained by using characters derived from the pectoral and upper limb muscles. It was recently argued that since the *Pan/Homo* split, chimpanzees accumulated more phenotypic adaptations than humans, but our results indicate that modern humans accumulated more muscle character state changes than chimpanzees, and that both these taxa accumulated more changes than gorillas. This overview of the evolution of the primate head, neck, pectoral and upper limb musculature suggests that the only muscle groups for which modern humans have more muscles than most other extant primates are the muscles of the face, larynx and forearm.

Key words: evolution; head and neck; hominoids; morphology; muscles; pectoral and upper limb; phylogeny; primates.

Introduction

Most studies of the gross morphology of the soft tissues of primates are either in-depth investigations of a single structure or organ, or studies that focus on a single taxon (Gibbs, 1999; Gibbs et al. 2002). The reasons for these choices are not difficult to fathom. The type of detailed morphological familiarity needed for this type of research takes many years to acquire, specimens of primates are difficult to come by, and these investigations are time-consuming.

In 2002, Gibbs et al. reported the results of a phylogenetic metanalysis of information about the soft tissue morphology of the great and lesser apes. Of the 1783 soft tissue structures listed in the 6th edition of the Nomina Anatomica (1989), information from the literature was available for at least one of the apes for 621 out of the 1783 (i.e. ca. 35%), but only 240 structures were found to have published information for all four of the non-human anthropoid apes. To be useful for a phylogenetic analysis, more than one state of a structure must exist and one of those character states must be present in two or more of the taxa; these additional criteria reduced the character count to 171. These 171 structures were themselves a biased sample of both the types of soft tissue and the regions, for muscles (64% of the total) and the limbs (82% of the total) were over-represented. Despite, or perhaps because of, these biases, the 171 soft tissue structures were particularly effective at recovering a hypothesis of relationships {[(*Pan*, *Homo*) *Gorilla*] *Pongo*} among the hominids that was

Correspondence
Rui Diogo, Department of Anthropology, George Washington University, 2110 G St. NW, Washington, DC 20052, USA. T: +1 202 2481440; F: + 1 202 9946097; E: ruidiogo@gwmail.gwu.edu; rui_diogo@hotmail.com

Accepted for publication *12 May 2011*
Article published online *20 June 2011*

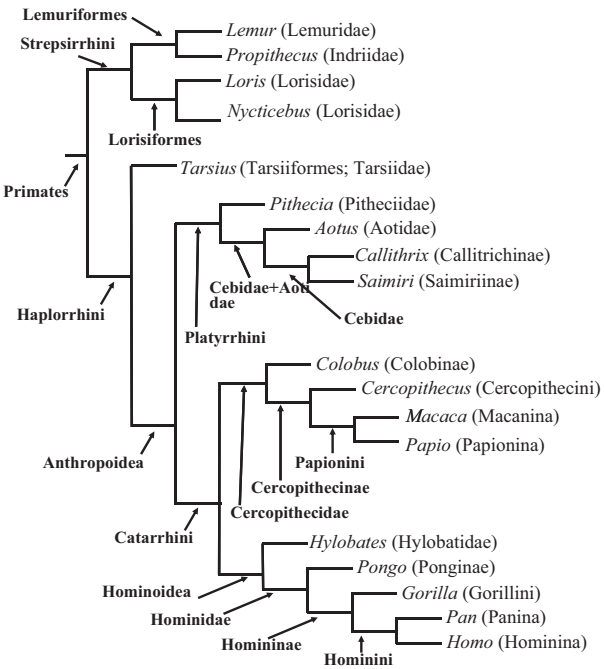

Fig. 1 Tree showing the higher-level primate relationships according to the Arnold et al. (2010) molecular Bayesian cladistic analysis based on both mitochondrial and autosomal genes (to make it easier to compare their results with the results of our own cladistic study based on muscles, only the 18 primate genera included in our study are shown in this tree; for more details, see text). The taxonomic nomenclature follows that of Fabre et al. (2009); see Materials and methods).

consistent with the consensus hypothesis of relationships supported by molecular evidence (Fig. 1). Nonetheless, the study had several obvious drawbacks. First, most of the published information about the structures could not be verified; there were very few accompanying photographs or drawings. Secondly, in many cases information about the same structure came from several different observers, so there was no guarantee their criteria for assessing, for instance, the presence/absence of a muscle or the number of muscle bellies were the same. Thirdly, the taxonomic scope was limited and there was no depth to the phylogenetic analysis; *Hylobates* was the sole outgroup. Fourthly, the sample of soft tissues emphasized regions that were relatively poorly represented by the hard tissue-bound fossil record and de-emphasized the head and neck, the region that is best represented in the hominid fossil record.

The combination of the performance of the Gibbs et al. (2002) sample of soft tissues that was dominated by muscle structures, as well as evidence suggesting that muscular characters are particularly useful for reconstructing phylogenetic relationships within other vertebrate taxa such as bony fish, amphibians and reptiles (e.g. Diogo, 2004a,b, 2007) encouraged us to focus our next set of studies on primate muscles. We were able to overcome many of the drawbacks listed above (i.e. lack of visual verification of the data, inter-observer error and narrow taxonomic scope) by conducting a systematic anatomical study of the muscles of the head, neck, pectoral region and the upper limb across the whole of the primate clade, together with a range of outgroups (see Materials and methods). Soft tissue data have previously been incorporated into some morphology-based investigations of the relationships among the taxa within the primate clade (e.g. Groves, 1986; Shoshani et al. 1996), but, except for Gibbs et al.'s (2000, 2002) taxonomically much narrower study, soft-tissue characters have always been substantially outnumbered by those based on hard-tissues. This near total reliance on osteological data is particularly unfortunate because it leads researchers to equate 'morphology' with 'hard-tissue' morphology.

Thus, we combined data from our own dissections with carefully validated information from the literature to undertake the first comprehensive parsimony and Bayesian cladistic analyses of the order Primates based on myological data for each of the major primate higher taxa and from a range of outgroups (tree-shrews, dermopterans and rodents). Specifically, we investigated whether the relationships supported by regional muscle characters are consistent with the most recent evolutionary molecular tree of primates (see Arnold et al. 2010; Fig. 1). A summary of some results of the cladistic analyses, as they apply to the primate clade and to hominoids in particular, have been presented elsewhere (R. Diogo, L. Matthews and B. Wood, unpublished data). In the present contribution we provide comprehensive information about the observations and comparisons of muscle morphology that were used in the cladistic analyses (Appendix 1) and present an updated overview of the evolution of the head, neck, pectoral and upper limb muscles within the order Primates.

Materials and methods

Taxonomic nomenclature and biological material

Primates

We dissected representative members of each major extant non-hominoid primate clade (Strepsirrhini, Tarsiiformes, New World monkeys and Old World monkeys) and of each of the five main groups of living hominoids (i.e. hylobatids, orangutans, gorillas, chimpanzees and modern humans). We mainly use the same taxonomic nomenclature as Fabre et al. (2009). The data included in the analysis come from four strepsirrhine genera, two from the infraorder Lemuriformes (Lemur, family Lemuridae; Propithecus, family Indriidae) and two from the infraorder Lorisiformes (Loris and Nycticebus, family Lorisidae); the single extant genus of the infraorder Tarsiiformes, Tarsius; representatives of three of the four extant platyrrhine families: Saimiri and Callithrix (Cebidae, subfamilies Saimiriinae and Callithrichinae, respectively), Pithecia (Pitheciidae), and Aotus (Aotidae; the other platyrrhine family being the Atelidae); the two extant subfamilies of Old World monkeys (family Cercopithecidae) represented by Colobus (Colobinae), *Papio*, *Macaca* and *Cercopithe-*

cus (Cercopithecinae; the two former genera represent the tribe Papionini, while the latter genus represents the other extant tribe of the subfamily, the Cercopithecini) and five extant hominoid genera: *Hylobates* (Hylobatidae), *Pongo* (Hominidae, Ponginae), *Gorilla* (Hominidae, Homininae, Gorillini), *Pan* (Hominidae, Homininae, Hominini, Panina) and *Homo* (Hominidae, Homininae, Hominini, Hominina). With respect to the hylobatids some authors recognize two extant genera: *Hylobates*, including 'gibbons', and *Symphalangus*, including siamangs (e.g. Goodman 1999). However, recent genetic studies indicate that 'gibbons' are not a monophyletic group. Most 'gibbons' are apparently more closely related to siamangs than to the 'gibbons' of the subgenus *Nomascus* (Fabre et al. 2009; Arnold et al. 2010). Other authors, including Fabre et al. (2009), recognize four extant hylobatid genera, but they do not agree on the identity of those genera (e.g. some refer to *Hylobates*, *Bunopithecus, Symphalangus* and *Nomascus*, whereas others refer to *Hylobates*, *Hoolock*, *Symphalangus* and *Nomascus*, see Groves, 2001, 2005). We have used the more traditional and stable classification (e.g. Napier & Napier, 1985; Nowak, 1999; Groves, 2001) that recognizes a single extant hylobatid genus (*Hylobates*; including species such as *Hylobates syndactylus*, *Hylobates lar*, *Hylobates gabriellae* and *Hylobates hoolock*, among others).

Non-primate mammals

Data came from dissections of the following non-primate mammals: (i) platypus (*Ornithorhynchus anatinus*), a member of the phylogenetically most plesiomorphic extant mammal clade, the monotremes; (ii) Norwegian rat (*Rattus norvegicus*), because rats are anatomically generalized therian mammals and because rodents and lagomorphs are the extant representatives of the the clade Glires, which is considered to be the sister-group of the clade Euarchonta [which includes three extant groups: tree-shrews (Scandentia), cologus or 'flying-lemurs' (Dermoptera), and Primates]; (iii) tree-shrew (*Tupaia* sp.), and (iv) colugo (*Cynocephalus volans*), because most authors (e.g. Pough et al. 1996; Shoshani et al. 1996; Kardong, 2002; Sargis, 2002a,b, 2004; Gunnell & Simmons, 2005; Kemp, 2005; Marivaux et al. 2006; Janeka et al. 2007; Silcox et al. 2007) consider tree-shrews and colugos to be the closest living relatives of primates. Apart from these non-primate specimens dissected for this study, we have previously dissected specimens from all the major groups of vertebrates; a complete list of all the other non-primate vertebrate specimens dissected in the past is given in Diogo & Abdala (2010).

Regarding the sample size used in this cladistic study, two points should be stressed. First, it is difficult to find primate, and particularly ape, specimens in circumstances where careful dissection can take place. During this project we made a considerable effort to establish connections with the major museums and zoos in the US and beyond. This effort resulted in us being able to dissect, for instance, two fresh gorillas, one fresh and one formalin-embalmed *Pongo*, and six fresh and three formalin-embalmed chimpanzees. The second point is that the sample size used in the cladistic study refers to the specimens dissected by us and the total number of specimens reported in the numerous publications that we refer to for this study. That is, when we code each character, we take into account all the information available, and in numerous cases the total sample size is very high when compared to other cladistic studies based on muscles (Diogo, 2004b). For example, for char. 118 (the presence/absence of the palmaris longus) we take into account information obtained from dissections of more than 20 hylobatid specimens, 19 orangutans, 25 gorillas, and 39 chimpanzees. So, in this case, for a single phylogenetic character, the total sample size, just for apes, is > 103 specimens. Concerning our review of the literature, it should also be noted that we are aware of the inconsistent usage of some specific taxonomic names in older systematic and anatomical studies, particularly prior to Osman Hill's studies in the 1950s (e.g. Hill, 1953–1974; see References). We addressed this problem by carefully reviewing all the names and synonyms used in those studies. So when in Appendix 1 we refer to the descriptions made by the authors of older studies, the scientific names we provide correspond to the current valid names (e.g. if our review of the literature pointed out that an author X reported that '*Hapale jacchus*' has a muscle Y, we state, in Appendix 1, that this author X reported that *Callithrix jacchus* has that muscle Y).

The specimens were mainly dissected by R.D., and were obtained from the following institutions: the Primate Foundation of Arizona (PFA), the Department of Anatomy (GWUANA) and the Department of Anthropology (GWUANT) of the George Washington University, the Department of Anatomy of Howard University (HU), the Smithsonian Institution's National Museum of Natural History (USNM), the Department of Anatomy of Valladolid University (VU), the Cincinnati Museum of Natural History (CMNH), the San Diego Zoo (SDZ) and the Canadian Museum of Nature (CMN). For each taxon we provide the Linnean binomial, its source, its unique identifier, the number of specimens from that source, and the state of the specimen (alc., alcohol-fixed; fre., fresh; for., formalin-embalmed).

Specimens dissected for the cladistic analysis

Aotus nancymaae GWUANT AN1, 1 (fre.; adult female). *Callithrix jacchus* GWUANT CJ1, 1 (fre.; adult male). *Cercopithecus diana* GWUANT CD1, 1 (fre.; adult female). *Colobus guereza* GWUANT CG1, 1 (fre.; adult male). *Gorilla gorilla* CMS GG1, 1 (fre.; adult male); VU GG1, 1 (fre.; adult female). *Homo sapiens* GWUANA HS1-16, 16 (for.). *Hylobates gabriellae* VU HG1, 1 (fre.; infant male). *Hylobates lar* HU HL1, 1 (for.; adult male). *Lemur catta* GWUANT LC1, 1 (fre.; adult male). *Loris tardigradus* SDZ LT53090, 1 (fre.; adult male). *Macaca fascicularis* VU MF1, 1 (fre.; adult male). *Macaca mulatta* HU MM1, 1 (for.; adult male). *Macaca silenus* VU MS1, 1 (fre.; adult male). *Nycticebus coucang* SDZ NC41235, 1 (fre.; adult female); SDZ NC43129, 1 (fre.; adult female). *Nycticebus pygmaeus* VU NP1, 1 (fre.; adult female); VU NP2, 1 (fre.; adult male); SDZ NP40684, 1 (fre.; adult female); SDZ NP51791, 1 (fre.; adult female). *Pan troglodytes* PFA 1016, 1 (fre.; adult female); PFA 1009, 1 (fre.; adult female); PFA 1051, 1 (fre.; infant female); PFA 1077, 1 (fre.; infant female); PFA UNC (uncatalogued), 1 (fre.; infant male); HU PT1, 1 (for.; infant male); GWUANT PT1, 1 (for.; adult female); GWUANT PT2, 1 (for.; adult female); VU PT1, 1 (fre.; adult male). *Papio anubis* GWUANT PA1, 1 (fre.; adult female). *Pithecia pithecia* VU PP1, 1 (fre.; adult male); GWUANT PP1, 1 (fre.; adult female). *Pongo pygmaeus* HU PP1, 1 (for.; neonate male); GWUANT PP1, 1 (for.; adult male). *Propithecus verreauxi* GWUANT PV1, 1 (fre.; adult female); GWUANT PV2, 1 (fre.; infant female). *Saimiri sciureus* GWUANT SC1, 1 (fre.; adult female). *Tarsius syrichta* CMNH M-3135, 1 (alc.; adult female). Other mammalian specimens dissected for this paper: *Cynocephalus volans* USNM 144941, 1 (alc.). *Rattus norvegicus* USNM uncatalogued, 2 (alc.). *Tupaia* sp. UNSM 87244, 1 (alc.).

Anatomical nomenclature and anatomical regions studied

Our study focuses on the head, neck, pectoral and upper limb muscles. One reason for focusing on muscles from these regions is that a previous review (Gibbs, 1999; Gibbs et al. 2002) suggested there is more information available about the configuration and variants of these muscles than for other regions. Another reason is that existing data from previous studies by R.D. and colleagues of the cephalic, pectoral and forelimb muscles in non-mammalian vertebrates (e.g. Diogo & Chardon, 2000; Diogo et al. 2001, 2008a,b, 2009a,b; Diogo, 2004a,b, 2007, 2008, 2009; Diogo & Abdala, 2007, 2010) allows us to compare the muscles of primates not only with the muscles of the non-primate mammals dissected for this work, but also with those of numerous other vertebrates, such as bony fish, amphibians and reptiles (see above).

The nomenclature for the head, neck, pectoral and upper limb muscles follows that of Diogo & Abdala (2010). The pectoral and upper limb muscles are divided into five subgroups: pectoral, arm, ventral forearm, dorsal forearm, and hand. Regarding the head and neck muscles, we focus on four main subgroups:

1 *Mandibular*. These are generally innervated by the Vth cranial nerve (e.g. the muscles of mastication and one of the middle ear muscles, the tensor tympani).
2 *Hyoid*. These are usually innervated by the VIIth cranial nerve (e.g. muscles of facial expression and the other middle ear muscle, the stapedius).
3 *Branchial*. These are usually innervated by the IXth and Xth cranial nerves (e.g. the majority of the intrinsic laryngeal muscles), although the trapezius and sternocleidomastoideus are mainly innervated by the XIth cranial nerve.
4 *Hypobranchial*. According to Edgeworth (1935) the muscles in this group are developed from the anterior myotomes of the body and thus they have all migrated into the head (e.g. infrahyoid muscles). Although they retain their main innervation from spinal nerves, they may also be innervated by the XIth and XIIth cranial nerves, but they usually do not receive any branches from the Vth, VIIth, IXth and Xth cranial nerves.

Head and neck muscles not included in this study are the *epibranchial* muscles *sensu* Edgeworth (1935), which are absent in extant osteichthyans and thus are not present in primates and other mammals, and the *internal and external ocular muscles*, *sensu* Edgeworth (1935), which are usually innervated by the cranial nerves III, IV and/or VI.

Cladistic analyses

The information obtained from our dissections and from reviewing the literature about the head, neck, pectoral and upper limb musculature of primate and non-primate taxa was coded and used in both parsimony and Bayesian cladistic analyses. Autapomorphies for the terminal taxa examined were actively searched for and included in these analyses.

Parsimony analyses

Nona & Winclada (version 10.00.08; Nixon, 2002) and PAUP 4.0 (version 4.0; Swofford, 2003) were employed in the search for the most parsimonious cladograms. Tree manipulations and diagnostics were done with the help of Nona & Winclada and MESQUITE (version 2.73; Maddison & Maddison, 2010). The search for the most parsimonious trees used Nona & Winclada with the 'multiple TBR (tree-bisection-reconnection) + TBR (mult*max*)' option and an 'unconstrained' search, with 999 999 maximum trees to hold, 9999 replications, and 9999 starting trees per hold and 0 random seed. The parsimony bootstraps were conducted using a heuristic search with the TBR algorithm of PAUP, 1000 replications, starting trees obtained via stepwise addition, the 'Duptrees=Keep' option, one tree held at each step during stepwise addition, and 1000 initial 'MaxTrees'.

Parsimony analyses were conducted on four different datasets. The first dataset ('complete dataset') includes the 21 mammalian genera listed above, and all of the 166 myological characters described in Appendix 1 (Table 1). All the characters have two states (e.g. CS0 and CS1), except characters 60, 68, 124, 136, 138 and 149, which are multistate ordered characters, and characters 129 and 162, which are multistate unordered characters. The coding of 'ordered' characters usually increases resolution relative to the coding of 'unordered' characters. Several authors (e.g. Slowinski, 1993) have defended a mixed-parsimony approach in which multistate characters should be treated as 'ordered' whenever reasonable but otherwise treated as 'unordered' (see also Diogo, 2004a, 2007). Following this procedure, characters 129 and 162 were coded as unordered because, contrary to the other multistate characters, in these two characters there is no logical reason to assume that a transition from CS0 to CS2 (and/or to CS3, in char. 162) would likely require passing through CS1 (and/or through C2, in char. 62) (see Appendix 1). Regarding character 129, there is no logical reason to assume that from CS0 with four lumbricales it was necessary to pass through CS1 with three lumbricales to reach CS2 with seven lumbricales. Concerning character 162, there is also no logical reason to assume that from CS0 (i.e. extensor indicis inserting onto digits 2–3) it is necessary to pass through CS1 (i.e. insertions onto digits 1–3) and then through CS2 (i.e. insertions onto digits 2–4) to reach CS3 (i.e. an exclusive insertion onto digit 2). When a test was done to check whether coding the multistate characters 60, 68, 124, 136, 138 and 149 as unordered affects the results, there was no evidence of an effect. The single most parsimonious tree obtained has the same clades and similar properties (i.e. length = 30, CI = 58, but RI = 72 instead of 73) as the single most parsimonious tree shown in Fig. 2. It should also be noted that in the Nona & Winclada matrix used in the cladistic analysis there is a terminal taxon named 'Outgroup' and a character 'number 0', which include zeros only. The extra terminal taxon and character in Nona & Winclada are due to the way this program constructs character matrices (by starting with a character 'number 0' and not by number 1) and roots the trees in heuristic analyses by always forcing the first taxon that is listed in the matrix to appear in the root of the tree (i.e. it is constrained to be the most plesiomorphic taxon of the tree). We use the terminal taxon named 'outgroup' not as an imaginary clade to polarize the phylogenetic characters but instead as a way to avoid one of the three outgroups used in our study automatically appearing (by placing it as the first taxon of the matrix) as the most plesiomorphic taxon in all of the trees. That is, for all parsimony analyses, *Rattus*, *Cynocephalus* and *Tupaia* were assigned as unconstrained outgroups and all other taxa were included in the ingroup. In the present study, deleting both the character 'number 0' and the 'Outgroup' taxon in Nona & Winclada had no effect on the primate

Table 1 Matrix of characters states of each of the 166 muscular characters described in the Appendix 1, for each of the 21 taxa listed in the Materials and Methods; '-' and '?' mean 'inapplicable' and 'missing', respectively (for more details, see Appendix 1 and Materials and methods).

	0	0	0	0	0	0	0	0	0	0	1	1	1	1	1	1	1	1
	0	1	2	3	4	5	6	7	8	9	0	1	2	3	4	5	6	6
	1	0	0	0	0	0	0	0	0	0	0	0	0	0	0	0	0	6
Rattus	00000000000000100000000000000000000000000100000-	0101000000000000100000000000-	0010001000000000000000000001001000000000000?	00000000000000000000000--0010000010?	00000000?	0
Cynocephalus	1011100001--0000000100101100000111010000000110-	01000000000?	1001101--01100000-	0000001000000000000000001000001-	0100000010101001000010200000000011000--100-	-001000010111100?	0
Tupaia	000001-1001000000000000000110011011101000000100-	1000001000110000000100000100-	0000000000101100000100000001-	0000000000000010000010000000000011000--000-	-0000000100001000		
Lemur	1010000100010000000000010110001011011000000110-	0100101000110000000000001000000-	0000000000000000000010100000100000000001000000000000000000000000011100001010000000001000?	0000			
Propithecus	1010000100010000000000011110001011011000000011??	0100101000110000000000001?	00000-	0000000001000000000100000001000000000001000000000000000000000000011100001010000000001000?	0000		
Loris	10100001?	00000?	0000000010110001011011000000?	1111000?	10??	0???	0000??	00001000000-	0100000001000000000010111--011-	0000000011000010?	0000000000000000000111100?	1010000100110000000						
Nycticebus	101000?	1?	0000000000000010110001011011000000?	1111000??	0??	0?	1?	0000??	000010?	0000-	0100000001000000000010111--011-	0000000010000100000000000000000000011110011010000100110000000						
Tarsius	1000000100000010000110101100?	1011011000000010-?	1101010000000000000011000000-	0000000000000000000001000010011-	0000000010000010000001000111100100?	1000010101000001000000?	00						
Aotus	1010001110000010000100101110 01-	1101100100011100000101101001100000???	11000000-	0100011001000000010001100001??	0000?	0001000001000000000000100001110010000101000011010000 21100							
Callithrix	1010001101--0010000100101110 01-	11011000010110-	0100101101000200010001000000-	01000?	0001000000010001100001 1-	0000?	0001000001000000000000100000?	11000--0010100001101000 21100							
Pithecia	1010001110?	0001000010011111000111011001 0?	01110000010 1?	0101010000000110000 1-	0?	0001001100000000100011000011-	1000000010000010000000000010000111001000010100001101000 21100											
Saimiri	1000001111--0010000100101110001010 1?	0010101110000010110100020000000110000 1-	0100011001000000010001100001 1-	0000?	0001000001000000000000100001110010000101000011010000 21100													
Macaca	1000001?	10?	0001010010011110100111011111000111000001010000110000000010000 1-	010000?	001001000000010?	00001??	0001100010000010000000000010000200001100012110001101000000											
Papio	1000001110100010100100111101001110111100?	1111000010100011?	1?	000000010000001-	0?	0000?	0010010000010101000011-	000?	1000100000100000000000100002000011000121100011010000 0									
Cercopithecus	10100??	1101000101001001011010011101111100011100000101001110?	00001--10000001-	0100000001001000000001010000 11-	0000?	0001000001000000000000100002000011000121000011010000 0												
Colobus	10100??	1101000100000100111100001110111110011110000010100111100000001--1?	0000111000000000100100000001010000 11-	000?	1100100000100001000000100002000011000121000011010000 1100													
Hylobates	1010001010000010000100111101001110110110011111010011 0?	00010000?	1000211100110100010111101100110000010011101101000111000?	1?	0?	11-0011001000120101111111110000?	01110020001											
Pongo	11---??	0100011100111001111000011110111110011111000?	1010100100?	00?	0002101001110100001011001001000010100001 1-	1001011110000110121-00001----0020100110001110000100100000000												
Gorilla	1000001?	1010001101010111110000111011111001111100001010110100000100121110011100011010110000010000?	0100001001001011110010110120000001----1020100110001110000100110030010															
Pan	1000001010100011010101111100001110111110011111000010101111001101121110011100000000110000010000101000010010010111100100101200000000000102000011000111000010011003 0000																	
Homo	1010001010100011010101111100001110111110011111000010101111001010011201 11----0000001011000-1--0000010000100101100111001011002 0000001----2020100110001 11?	000100110030011																

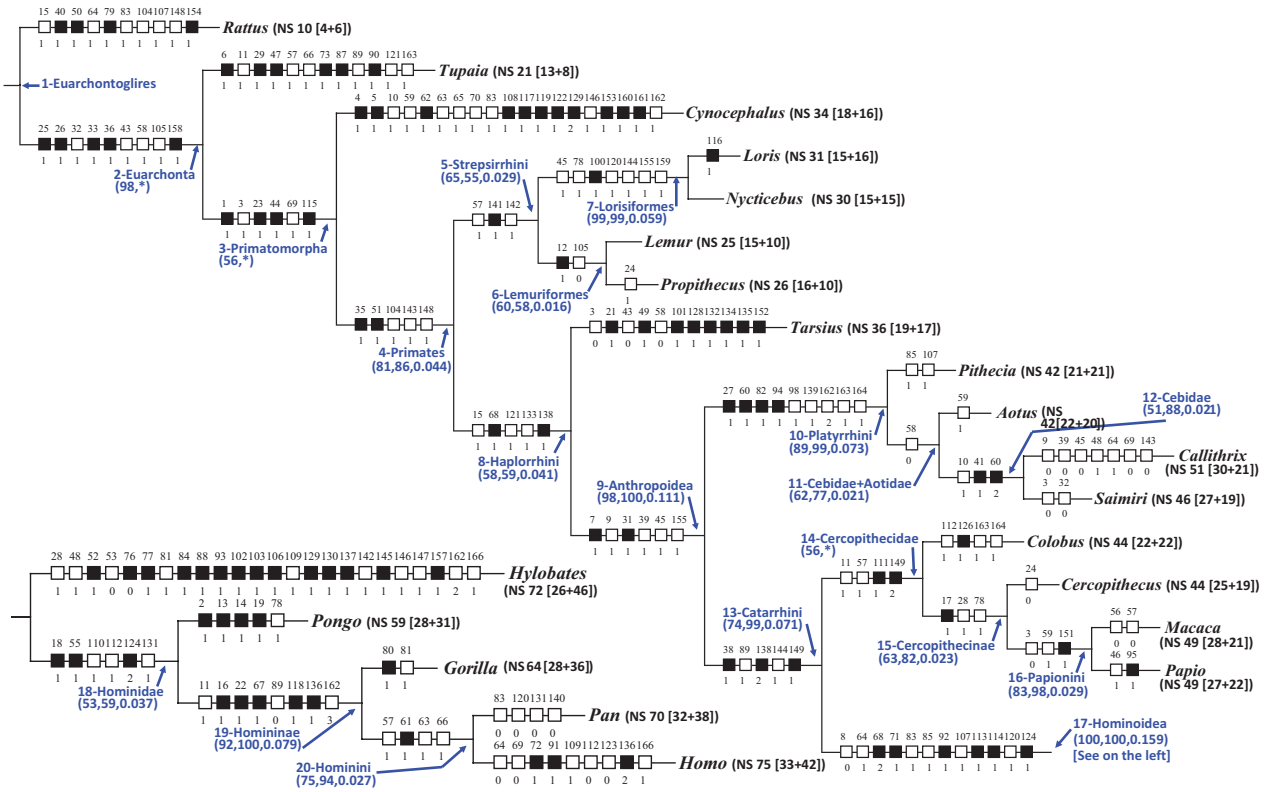

Fig. 2 Single most parsimonious tree (L 301, CI 58, RI 73) obtained from the analysis of the complete dataset (166 characters; Table 1). Unambiguous transitions that occurred in each branch are shown in white (homoplasic transitions) and black (non-homoplasic transitions) squares (numbers above and below the squares indicate the character and character state, respectively). Below the number and name (name only shown if clade appears in tree of Fig. 1, to illustrate congruence with that tree; if that is not the case, the clades are instead named X1, X2, and so on) of each clade are shown the bootstrap support values (BSV) obtained from the parsimony analysis (on the left) and the credibility support values (CSV, in the center) and branch lengths (BL, on the right; shown when CSV is ≥ 50) obtained from the Bayesian analysis (gamma model). NS indicates total number of unambiguous evolutionary steps accumulated from basal node of tree to the respective terminal taxa; between square brackets are shown the partial numbers for the head and neck (on the left) and for the pectoral and upper limb (on the right) characters. *Indicates support values that are < 50, i.e. all clades obtained in the parsimony analysis were also obtained in the Bayesian analysis, except that the Bayesian 'majority consensus' tree has a trichotomy leading to *Cynocephalus* + *Tupaia* (this clade having a CSV of 53; BL of 0.046), to *Rattus*, and to Primates, and a trichotomy leading to *Colobus*, to the Cercopithecinae, and to hominoids.

relationships shown in the tree of Fig. 2 (but it does serve to confuse the examination and discussion of the results because character number 1 is then considered to be character 'number 0' instead, and so on).

The second dataset (designated here as the 'head and neck', or 'HN', dataset) includes the same taxa as the complete dataset, but it only uses the 67 head and neck characters (i.e. char. 1–67). The third dataset (designated here as the 'pectoral and upper limb', or 'PU', dataset) also includes the same taxa, but it only uses the 99 pectoral and upper limb characters (i.e. char. 68–166). By analyzing the HN and the PU datasets separately, it is possible to compare the most parsimonious trees obtained from the analysis of each of these two datasets (Figs 3 and 4) and of the complete dataset (Fig. 2). To test the potential utility of including muscular characters in phylogenetic studies of fossils, we ran a cladistic analysis using a fourth dataset (Fig. 5). This dataset (designated here as the 'fossil', or 'FOS', dataset) includes the same taxa as the other datasets, but only includes the 92 characters that can, in theory (i.e. in the best case scenario), be potentially investigated in fossils by a detailed macroscopic, microscopic and/or histological study of bony marks/imprints. Most characters concerning the facial and laryngeal muscles are not included in this dataset because these muscles do not usually attach onto bones (the former are mainly associated with the skin and other soft tissues, whereas the latter are usually attached to the cricoid, arytenoid and thyroid cartilages). The 92 characters included in the FOS dataset are: 1–2, 5–6, 10, 12–15, 20–21, 42, 44–50, 58, 65, 67, 70–74, 76–80, 82–84, 87–88, 91–92, 95–97, 99–102, 104, 107–108, 110, 112–116, 119–124, 131, 133–137, 139, 141–148, 150–162, 164–166 (see Fig. 5 and Appendix 1).

The consensus trees that are shown in Figs 3, 4 and 5 are 'majority' consensus trees (i.e. they include only those clades that are supported in ≥ 50% of the most parsimonious trees obtained from the analyses of the respective datasets). The support for the clades shown in each figure is indicated by five different measures: (i) its frequency, in the tree (pointing out that it is present in ≥ 50% of the most parsimonious trees obtained); (ii) its bootstrap support value (indicated below the name of each clade); (iii) its parsimony branch length (indicated by the squares shown in each branch); (iv) its Bayesian credibility value (indicated below the name of each clade) and (v) its appearance

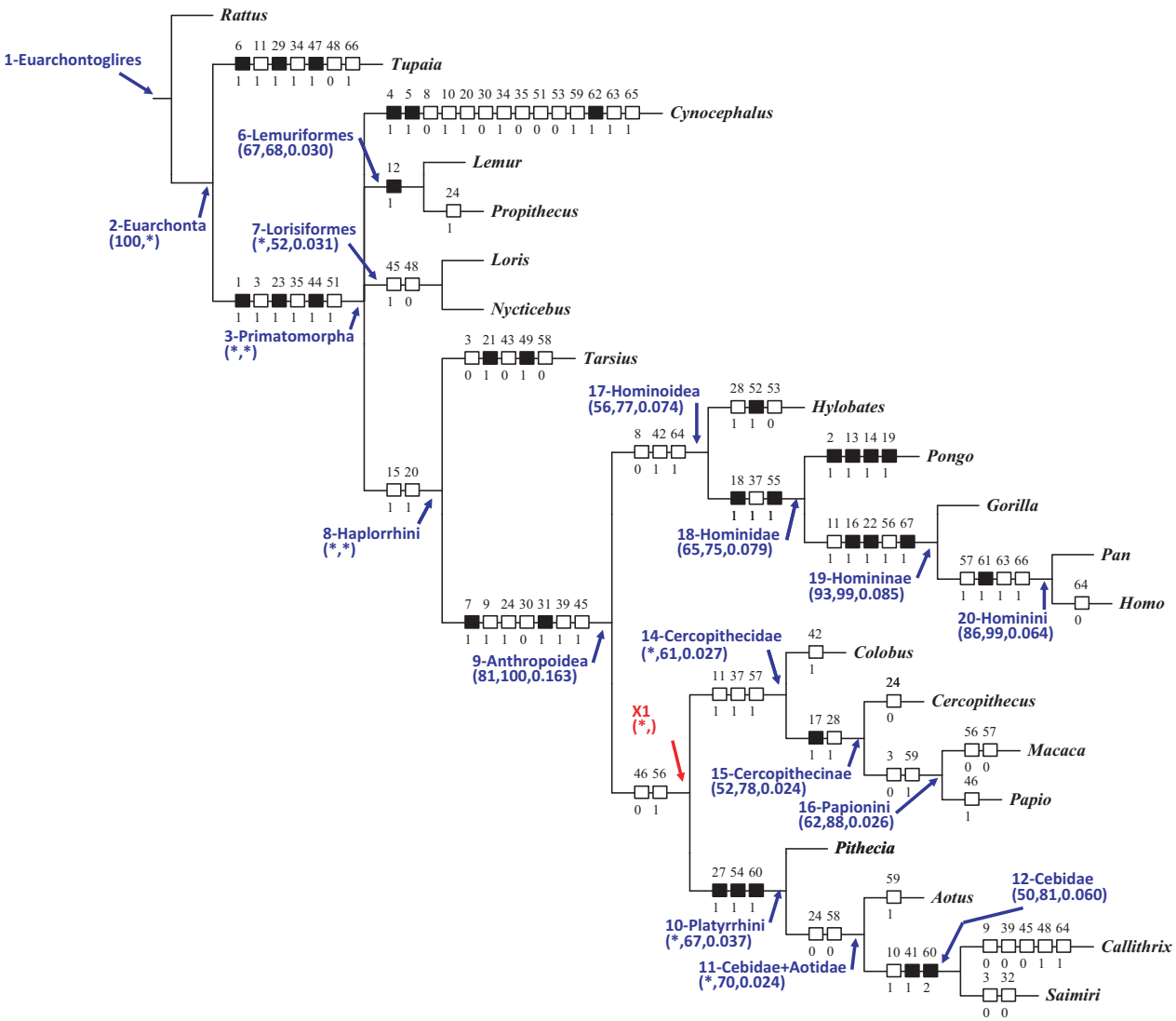

Fig. 3 'Consensus majority' tree of seven most parsimonious trees (each with L 123, CI 55, RI 73) obtained from the analysis of the 67 head and neck characters (char. 1–67). Unambiguous transitions that occurred in each branch are shown in white (homoplasic transitions) and black (non-homoplasic transitions) squares (numbers above and below the squares indicate the character and character state, respectively). Below the number and name (name only shown if clade appears in tree of Fig. 1, to illustrate congruence with that tree; if that is not the case, the clades are instead named X1, X2, and so on) of each clade are shown the bootstrap support values (BSVs) obtained from the parsimony analysis (on the left) and the credibility support values (CSVs, in the center) and branch lengths (BLs, on the right; shown when CSV is ≥ 50) obtained from the Bayesian analysis (gamma model). *Indicates support values that are less than to 50, i.e. all clades obtained in the parsimony analysis were also obtained in the Bayesian analysis, except that the Bayesian 'majority consensus' tree has a polytomy leading to *Rattus*, to *Cynocephalus*, to *Tupaia*, to *Tarsius*, to *Lemur* + *Propithecus*, and to *Loris* + *Nycticebus,* and does recover the clade Cercopithecidae + Hominoidea (this clade having a CSV of 76; BL of 0.077).

in the majority consensus tree obtained from the Bayesian analysis (indicating that it is present in ≥ 50% of the trees obtained in that analysis; this is noted below the name of each clade and in the captions of the figures; see Bayesian analyses, below).

Bayesian analyses

We conducted Bayesian phylogenetic inference using the same datasets that were used for the parsimony analyses. We conducted Bayesian inference through Metropolis coupled Monte Carlo Markov Chain (MC3) techniques with the software MRBAYES v. 3 (Huelsenbeck & Ronquist, 2001; Ronquist & Huelsenbeck, 2003). By using MRBAYES there was no need to include the 'Outgroup' including zeros only that was used in the parsimony analyses of Nona & Winclada. In all of these analyses, we employed six independent runs, each containing three hot chains and one cold chain. We recorded every 1000 trees along the cold sampling chains for 1 000 000 iterations. We used an empirically determined burnin of 100 sampled trees. Burnin was determined by examining multiple chains visually for stationary

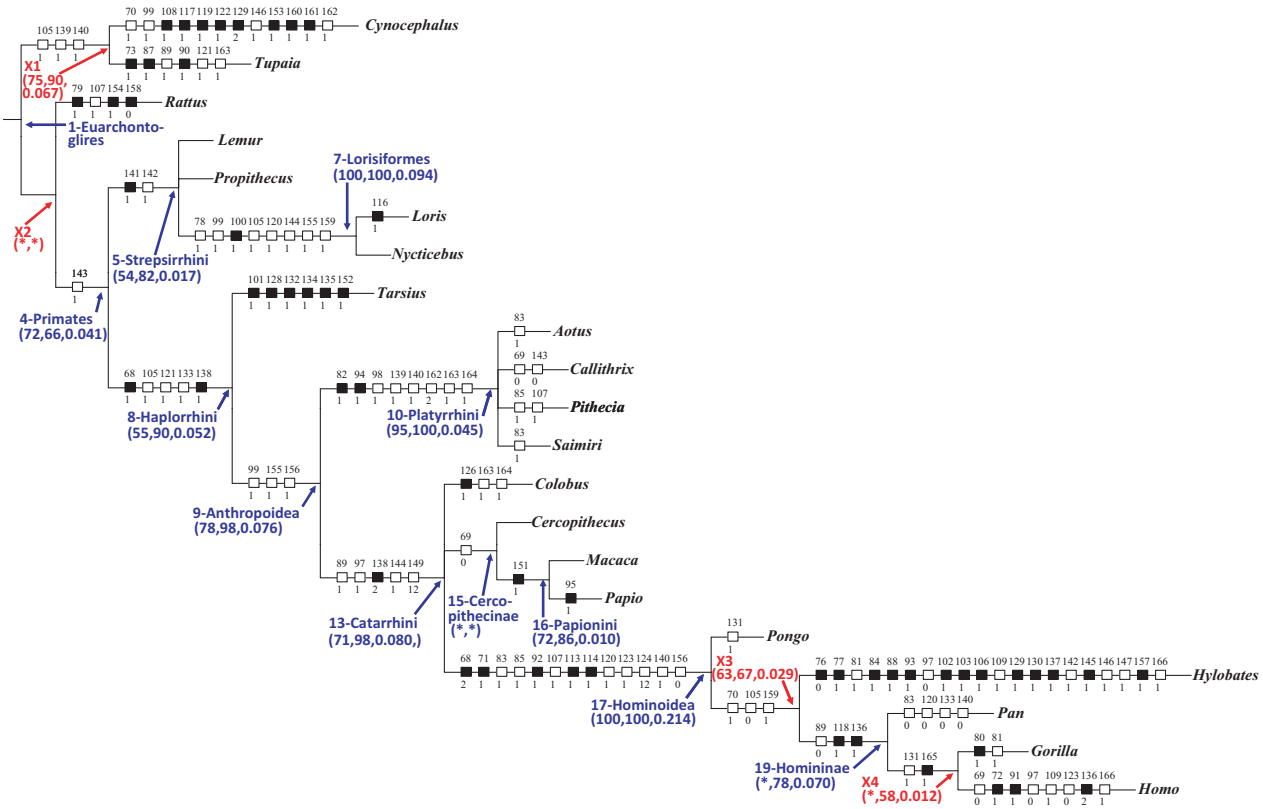

Fig. 4 'Consensus majority' tree of 32 most parsimonious trees (each with L 173, CI 61, RI 75) obtained from the analysis of the 99 pectoral and upper limb characters (char. 68–166). Unambiguous transitions that occurred in each branch are shown in white (homoplasic transitions) and black (non-homoplasic transitions) squares (numbers above and below the squares indicate the character and character state, respectively). Below the number and name (name only shown if clade appears in tree of Fig. 1, to illustrate congruence with that tree; if that is not the case the clades are instead named X1, X2, and so on) of each clade are shown the bootstrap support values (BSVs) obtained from the parsimony analysis (on the left) and the credibility support values (CSVs, in the center) and branch lengths (BL, on the right; shown when CSV is ≥ 50) obtained from the Bayesian analysis (gamma model). *Indicates support values that are less than to 50, i.e. all clades obtained in the parsimony analysis were also obtained in the Bayesian analysis, except that the Bayesian 'majority consensus' tree has a trichotomy leading to *Rattus*, to Primates, and to *Cynocephalus* + *Tupaia*, and has a polytomy leading to *Colobus*, to *Cercopithecus*, to the Papionini, and to hominoids.

as well as through a diagnostic statistic, the potential scale reduction factor. Consensus trees presented in the results reflect the mean branch lengths and majority clades present in the posterior samples of the 5400 trees post-burnin trees.

We used Bayes factor comparisons with the above MC3 procedure to test two models of character evolution for the complete dataset. We estimated the Bayes factor by calculating the harmonic mean likelihood across all the runs of each model for character evolution (Kass & Raftery, 1995). One model, the 'simple' model, had one invariant and symmetric rate of character change for all the characters. It was implemented as the 'standard' data type in MRBAYES because some characters included three or more states and some binary characters were not present/absent coded but instead reflected a different dichotomous set of states. Thus, the state labels across characters should be considered arbitrary (Lewis, 2001). Our second model for character evolution also coded the data as the 'standard' type, but it additionally fitted a gamma parameter that allowed for variation in the rate of evolution across different characters in the matrix. In both models, we ordered the transitions between states of particular characters as described in the section on parsimony analyses.

We used *t*-tests of the rates inferred under the gamma model to test whether the HN and PU character sets had significantly different rates of evolution. Using the model preferred under the Bayes factor criterion, we also conducted another MC3 inference in the same manner described above but with the tree topology parameter unlinked across the HN and PU character partitions. This enabled us to conduct independent Bayesian inferences of the tree topology for each character set within the context of a single MC3 procedure.

Results and Discussion

Cladistic analyses

The most parsimonious tree obtained from the analysis of 166 head, neck, pectoral and upper limb muscle characters in 18 primate genera, and in representatives of the Scandentia, Dermoptera and Rodentia (Fig. 2), matches the most recent evolutionary molecular trees for primates (Fig. 1; e.g.

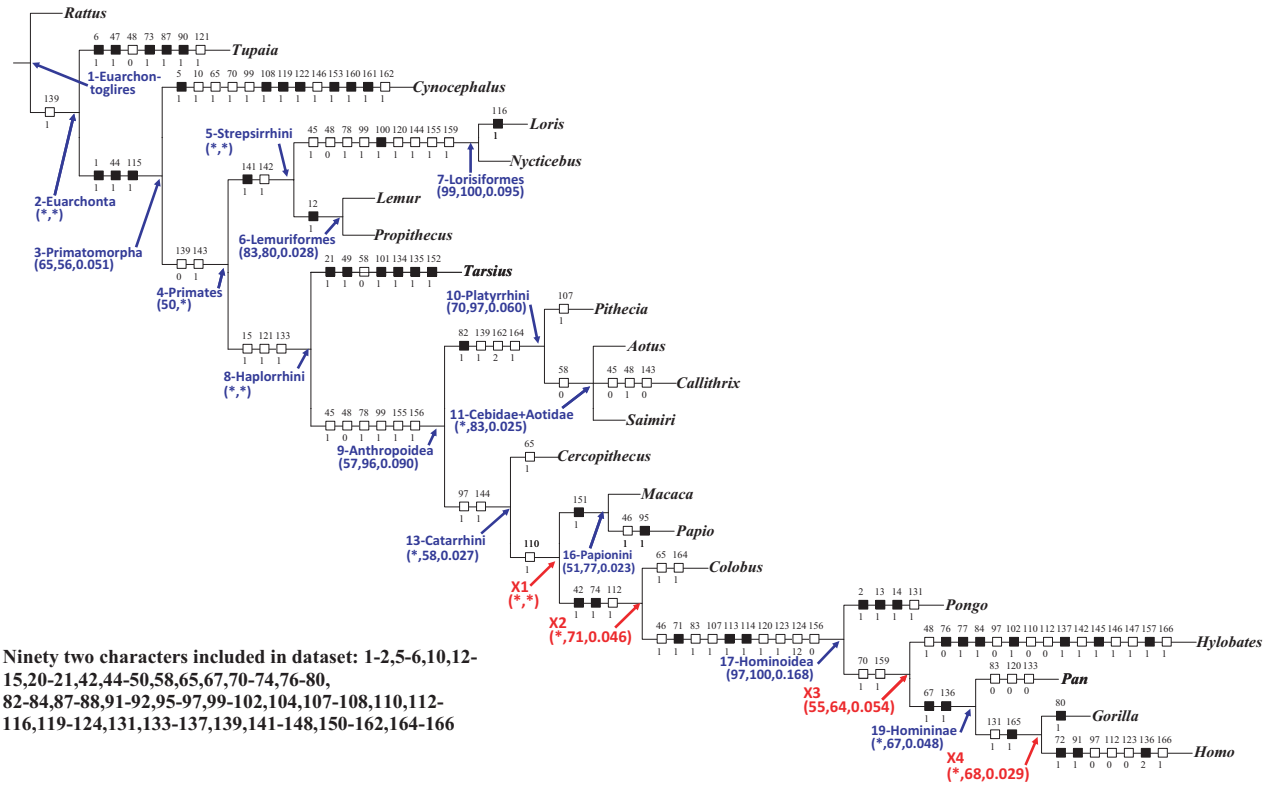

Fig. 5 'Consensus majority' tree of two most parsimonious trees (each with L 153, CI 62, RI 72) obtained from the analysis of the 92 characters that might be examined in fossils. Unambiguous transitions that occurred in each branch are shown in white (homoplasic transitions) and black (non-homoplasic transitions) squares (numbers above and below the squares indicate the character and character state, respectively). Below the number and name (name only shown if clade appears in tree of Fig. 1, to illustrate congruence with that tree; if that is not the case the clades are instead named X1, X2, and so on) of each clade are shown the bootstrap support values (BSVs) obtained from the parsimony analysis (on the left) and the credibility support values (CSVs, in the center) and branch lengths (BLs, on the right; shown when CSV is ≥ 50) obtained from the Bayesian analysis (gamma model). *Indicates support values that are less than to 50, i.e. all clades obtained in the parsimony analysis were also obtained in the Bayesian analysis, excepting that the Bayesian 'majority consensus' tree has a trichotomy leading to *Rattus*, to the Primatomorpha, and to *Tupaia*, has a polytomy leading to *Cynocephalus*, to *Tarsius*, to the Lemuriformes, and to a clade Lorisiformes + Anthropoidea (which has a CSV of 52; BL of 0.067), has a trichotomy leading to *Cercopithecus*, to the Papionini, and to the clade *Colobus* + hominoids, and recovers the clade *Callithrix* + *Saimiri* (which has a CSV of 50; BL of 0.018).

Bininda-Emonds et al. 2007; Fabre et al. 2009; Arnold et al. 2010). In Fabre et al.'s study, *Saimiri* is closer to *Aotus* than to *Callithrix*, but in Arnold et al.'s study and in the most recent and comprehensive molecular analysis of platyrrhine relationships (Wildman et al. 2009) it is closer to *Callithrix*, as it is in our study (Figs 1 and 2). Therefore, the tree shown in Fig. 1 summarizes the relationships among primates supported by the most up-to-date molecular evidence (Arnold et al. 2010), and we subsequently refer to this as 'the most recent evolutionary molecular tree' of primates. The full list of synapomorphies/apomorphies of each clade/terminal taxon shown in Fig. 2 is given below.

Most primate clades shown in Fig. 2 are supported by high parsimony bootstrap support values (BSVs) and/or high Bayesian credibility support values (CSVs) [e.g. 12 (71%) of the 17 primate clades have CSVs and/or BSVs ≥ 75, and 8 (47%) of them have CSVs and/or BSVs that are ≥ 94]. Ours is the first morphological cladistic study based on a large data matrix to provide compelling levels of support for the chimp-human clade [BSV 75, CSV 94; e.g. in Shoshani et al.'s 1996 cladistic analysis including 18 extant primate genera and 264 (mostly osteological) characters, the chimp-human clade had a low support (BSV of 42)]. Although this is outside the main scope of the present work, it is interesting to note that the clade Dermoptera + Primates is recovered in our parsimony tree, although the BSV is low (56; Fig. 2). Osteological analyses have traditionally favored a Scandentia + Primates clade, but some recent molecular studies support the clade Dermoptera + Primates (e.g. Janecka et al. 2007; Bininda-Emonds et al. 2007).

Comparison of the separate analyses of the head and neck (HN; char. 1–67) and the pectoral and upper limb (PU; char. 68–166) datasets suggests that, at least for the taxa we studied, HN muscles are a better match for the most recent molecular tree (Fig. 1). For example, while the consensus tree obtained from the parsimony analysis of 67 HN

characters (Fig. 3) recovered 17 (85%) of the 20 clades shown in the parsimony tree of Fig. 2, the consensus tree obtained from the parsimony analysis of a larger number (i.e. 99) of PU characters (Fig. 4) only recovered 12 (60%) of the 20 clades. The PU dataset also fails to recover the monophyly of the less inclusive clades such as the Cebidae + Aotidae, the Cebidae, the Cercopithecidae, the Hominidae and the Hominini (Fig. 4). However, most of the support for the monophyly of the larger groupings (i.e. the order Primates and suborder Strepsirrhini) is provided by PU characters (Figs 2–4; see List of synapomorphies/apomorphies below). The HN dataset fails to recover the monophyly of either of these two groups (Fig. 3). The Haplorrhini clade (i.e. *Tarsius* + Anthropoidea) is also more strongly supported by PU than by HN characters (Fig. 3) and the Bayesian analysis of the PU dataset is one of the few anatomical cladistic analyses that provides strong support [CSV 90; Fig. 4] for the Haplorrhini (e.g. Shoshani et al. 1996). Thus, despite recovering a smaller number of the clades of the most recent molecular tree than recovered by the HN characters, the PU muscle characters are particularly effective at recovering relationships at the base of the primate clade.

Apart from examining the HN and PU datasets separately, we performed a cladistic analysis of a dataset made up of 92 HN and PU muscle characters that, in the best case scenario, can be studied in fossilized bony remains (see Materials and methods and Fig. 5). The results are encouraging across the primate clade as a whole because the consensus tree obtained in the parsimony analysis of this dataset (Fig. 5) recovers 15 (75%) of the 20 clades shown in the parsimony tree of Fig. 2 and in the molecular tree of Fig. 1. However, with respect to the hominoids the results are discouraging, for the analysis groups *Hylobates* with the Homininae and *Gorilla* with *Homo* (Fig. 5); the implications of this have been discussed elsewhere (R. Diogo, L. Matthews and B. Wood, unpublished data). In some respects, this consensus tree is similar to the consensus tree obtained from the parsimony analysis of the PU dataset; this is not unexpected because 70 (76%) of the 92 characters included in the dataset are PU characters. However, although the dataset only includes 22 HN characters, these characters are crucial for recovering three clades that are not recovered in the analysis of the PU characters (Fig. 4): the Primatomorpha, the Lemuriformes and the clade Cebidae + Aotidae. This corroborates the strong phylogenetic signal of the HN muscles, and stresses that, although some of these muscles cannot be studied in bony remains, attempts to use muscle data to inform reconstructions of the relationships of fossil taxa should ideally include as much information as possible from both postcranial and cranial remains.

The most parsimonious tree obtained from the analysis of the complete dataset (CI 58, RI 73) has a total length of 301 steps, of which 100 (33%) are non-homoplasic (i.e. they were not independently acquired or reverted elsewhere in the tree) evolutionary transitions (black squares in Fig. 2). Of the 220 steps that are unambiguously optimized in the tree (squares in Fig. 2), 28 (i.e. 13%) are reversions to a plesiomorphic state. Taking into account the total number of steps (301) within the tree, the number of characters (166) and the number of muscles (129) represented by the data in the cladistic analysis, there are ca. 1.8 evolutionary transitions per character and ca. 2.3 evolutionary transitions per muscle studied. When broken down into HN characters only (char. 1–67), the number of steps is 124 (number of steps for each character shown in Appendix 1) for 67 of the characters and 53 muscles analyzed, so there are ca. 1.9 evolutionary transitions per character and ca. 2.3 evolutionary transitions per muscle studied; 39 of the 124 steps (i.e. 31%) are non-homoplasic. Of the 124 steps, 91 are unambiguously optimized in the tree of Fig. 2; 16 of these (i.e. 18%) are reversions. Regarding the PU characters (char. 68–166), there are 177 steps for 99 characters and 76 muscles, that is, ca. 1.8 evolutionary changes per character and ca. 2.3 evolutionary changes per muscle studied. Within those 177 steps, 61 (i.e. 34%) are non-homoplasic and 129 of the 177 steps are unambiguously optimized in the tree; 12 of these (i.e. 9%) are reversions.

Thus, within both the HN and PU datasets, the number of total evolutionary changes per muscle and the frequency of non-homoplasic transitions are similar. This result is consistent with a *t*-test of variable character transition rates obtained from the Bayesian gamma model. That test uses a Markov Chain process to estimate different evolutionary rates for different characters; although this model was statistically preferable to one without rate variation (Bayes factor = 5.24, 'positive' support), a *t*-test showed this rate variation was not partitioned across HN and PU character sets ($t = -1.03$, $P = 0.3$, 122 dif; see Materials and methods). A recent analysis of osteological data (Williams, 2007) revealed that the levels of homoplasy found in the dentition, the cranium and the postcranium of primates are also very similar to each other. It is noteworthy, however, that even though in our parsimony analysis the frequency of non-homoplasic changes is similar within the HN and PU datasets (about two-thirds of the changes are non-homoplasic in both datasets), the frequency of reversions within the HN dataset (i.e. 18%, with a ratio of 0.30 reversions per muscle studied) is twice that within the PU dataset (i.e. 9%, with a ratio of 0.16 reversions per muscle).

Lewis (1989: p. 43) stated that his anatomical studies of tetrapods suggest that 'while homologous (limb) muscles may show a wide range of shifting origins their insertions tend to remain relatively constant'. This suggestion is not supported by our analysis, because within the 301 character stage changes of the tree shown in Fig. 2, 48 concern a shift of the distal attachment(s) of the PU muscles (total steps of char. 71, 74, 76, 80, 83, 84, 92, 104, 112, 115, 116, 121, 122, 133, 134, 135, 137, 141, 144, 145, 147, 150, 152, 153, 159, 160, 162, 164, and 165 in Appendix 1]), whereas only 30 involve a shift of the proximal attachment(s) of these muscles (total

steps of char. 77, 78, 90, 97, 99, 102, 110, 113, 114, 119, 123, 124, 130, 146, 155, 156, and 161 in Appendix 1). Within those 301 character state changes, the number of changes concerning a shifting of the insertions (i.e. of the attachments onto more movable skeletal structures) of the HN muscles [14 (total steps of char. 5, 14, 45, 46, 47, 50, and 64 in Appendix 1)] is remarkably similar to the number of changes concerning a shifting of the origins (i.e. of the attachments onto less movable skeletal structures) of these muscles [15 (total steps of char. 30, 31, 41, 48, and 60 in Appendix 1)].

Synapomorphies of clades and apomorphies of terminal taxa

In this section we describe the synapomorphies of the clades and the apomorphies of the terminal taxa shown in Fig. 2 (the clade numbers correspond to the clade numbers used in that figure). We only include evolutionary transitions that have an unambiguous distribution within the most parsimonious tree obtained from the parsimony cladistic analysis of all 166 characters (squares of Fig. 2). After the descriptions of each character in terms of its derived condition, the character number and the character state transitions are given in parentheses. Non-homoplasic synapomorphies and apomorphies are in bold within the parentheses. Homoplasic evolutionary transitions to CS1 or CS2 that were independently acquired and/or reverted in other nodes are in regular type; reversions are in italics. Comments about some specific clades, terminal taxa and synapomorphies of clades/apomorphies of terminal taxa are also provided.

Euarchontoglires (clade 1: *Rattus, Tupaia, Cynocephalus, Lemur, Propithecus, Loris, Nycticebus, Tarsius, Pithecia, Aotus, Callithrix, Saimiri, Colobus, Cercopithecus, Papio, Macaca, Hylobates, Pongo, Gorilla, Pan, Homo*).

Rattus (terminal taxon). Jugulohyoideus is not a distinct muscle [15:0 → 1]. Mentalis is not a distinct muscle [**40:0 → 1**]. Constrictor pharyngis medius has no pars ceratopharyngea [**50:0 → 1**]. Anterior portion of sternothyroideus extends anteriorly to the posterior portion of the thyrohyoideus [64:0 → 1]. 'Pectoralis tertius' is a distinct muscle [**79:0 → 1**]. Pectoralis minor inserts onto the coracoid process [83:0 → 1]. Biceps brachii does not insert onto the ulna [104:0 → 1]. Coracobrachialis profundus is not present as a distinct head of the coracobrachialis [107:0 → 1]. Opponens digiti minimi is a distinct muscle [148:0 → 1]. Brachioradialis is not a distinct muscle [**154:0 → 1**].

Euarchonta (clade 2: *Tupaia, Cynocephalus, Lemur, Propithecus, Loris, Nycticebus, Tarsius, Pithecia, Aotus, Callithrix, Saimiri, Colobus, Cercopithecus, Papio, Macaca, Hylobates, Pongo, Gorilla, Pan, Homo*). Sternofacialis is not a distinct muscle [**25:0 → 1**]. Interscutularis is not a distinct muscle [**26:0 → 1**]. Frontalis is a distinct muscle [32:0 → 1]. Auricularis superior is a distinct muscle [**33:0 → 1**]. Corrugator supercilii is a distinct muscle [**36:0 → 1**]. Spinotrapezius is not a distinct muscle [43:0 → 1]. Chondroglossus is present as a distinct bundle of the hyoglossus [58:0 → 1]. Biceps brachii has no bicipital aponeurosis [105:0 → 1]. Extensor digiti quarti is not a distinct muscle [**158:0 → 1**]. As expected, dermopterans, primates and tree-shrews are more closely related to each other than to rodents (see Materials and methods). Interestingly, the clade Euarchonta is mainly supported by HN characters and is not recovered in the parsimony analysis of the PU dataset (Fig. 4). Within euarchontans, the frontalis became secondarily undifferentiated in *Saimiri*, and the chondroglossus became secondarily undifferentiated in *Tarsius* and in Cebidae + Aotidae. The spinotrapezius became secondarily differentiated in *Tarsius*, and the bicipital aponeurosis became secondarily undifferentiated in Lemuriformes.

Tupaia (terminal taxon). Tensor tympani is not a distinct muscle [**6:0 → 1**]. Stylohyoideus is partially pierced by the digastricus posterior and/or by the intermediate digastric tendon [11:0 → 1]. Zygomaticus major is almost completely covered by the platysma myoides and/or the platysma cervicale [**29:0 → 1**]. Trapezius does not insert onto the acromion [**47:0 → 1**]. Geniohyoideus is fused to its counterpart in the midline [57:0 → 1]. Omohyoideus has an intermediate tendon [66:0 → 1]. Atlantoscapularis posticus is a distinct muscle [**73:0 → 1**]. Teres minor is not a distinct muscle [**87:0 → 1**]. Latissimus dorsi and teres major are fused [89:0 → 1]. Dorsoepitrochlearis has two distinct proximal heads originating from the latissimus dorsi and the teres major [**90:0 → 1**]. Flexor carpi radialis inserts onto the metacarpals II and III [121:0 → 1]. Extensor pollicis longus is deeply blended with the extensor indicis [163:0 → 1].

Primatomorpha (clade 3: *Cynocephalus, Lemur, Propithecus, Loris, Nycticebus, Tarsius, Pithecia, Aotus, Callithrix, Saimiri, Colobus, Cercopithecus, Papio, Macaca, Hylobates, Pongo, Gorilla, Pan, Homo*). Intermandibularis anterior is not a distinct muscle [**1:0 → 1**]. Digastricus anterior is not in contact with its counterpart for most of its length [3:0 → 1]. Sphincter colli superficialis is not a distinct muscle [**23:0 → 1**]. Cleido-occipitalis is not a distinct muscle [**44:0 → 1**]. Rhomboideus major and rhomboideus minor are not distinct muscles [69:0 → 1]. Flexor digitorum superficialis also inserts onto digit 5 [**115:0 → 1**]. The separation between the digastricus anterior and its counterpart was independently lost in *Tarsius*, *Saimiri* and the Papionini, while the absence of separated rhomboideus major and rhomboideus minor was reverted in *Callithrix* and *Homo*. As explained above, the clade Dermoptera + Primates is not recovered in the parsimony analysis of the PU dataset (Fig. 4), but it is recovered in the parsimony analyses of the complete and HN datasets, although the BSV is low (Figs 2 and 3). When we force the tree of Fig. 2 to have the clade Dermoptera + Scandentia instead, the tree has two extra steps; of the four features uniting these two clades, features 34 and 137 are unique within the taxa included in the tree, although feature 137 is also found in various non-euarchontan mammals (e.g. Jouffroy, 1971): zygomatico-

orbicularis is a distinct muscle (char. 34, state 1), flexor digitorum brevis manus is a distinct muscle (char. 137, state 1), flexor brevis profundus 2 is not a distinct muscle (char. 139, state 1), and flexores breves profundi are fused with the intermetacarpales, forming the dorsal interossei (char. 140, state 1). In summary, although this study is one of the few morphology-based cladistic analyses that support the clade Dermoptera + Primates, the support for this clade is not strong. We will address specifically the relationships among Primates, dermopterans and tree-shrews in a future project.

Cynocephalus (terminal taxon). Digastricus anterior is not connected to the digastricus posterior by a well-defined intermediate tendon [**4:0** → **1**]. Digastricus anterior attaches onto the angle of the mandible [**5:0** → **1**]. Stylohyoideus is not a distinct muscle [10:0 → 1]. Hyoglossus is partially or completely fused with the thyrohyoideus [59:0 → 1]. Sternohyoideus is divided into two bundles [**62:0** → **1**]. Sternohyoideus does not contact nor lie against its counterpart for most of its length [63:0 → 1]. Omohyoideus is not a distinct muscle [65:0 → 1]. Rhomboideus occipitalis is not a distinct muscle [70:0 → 1]. Pectoralis minor inserts onto the coracoid process [83:0 → 1]. Pronator quadratus is not a distinct muscle [**108:0** → **1**]. Palmaris longus is hypertrophied [**117:0** → **1**]. Flexor carpi ulnaris does not originate from the humerus [**119:0** → **1**]. Flexor carpi radialis does not insert onto the metacarpal II or the metacarpal III [**122:0** → **1**]. There are frequently seven lumbricales [**129:0** → **2**]. Flexor digiti minimi brevis is partly originated from the pisiform [146:0 → 1]. Extensor carpi radialis longus does not insert onto the metacarpal II [**153:0** → **1**]. Extensor digiti minimi is partially inserted onto digit 3 [**160:0** → **1**]. Extensor digiti minimi originates from the radius [**161:0** → **1**]. Extensor indicis usually inserts onto digits 1–3 [162:0 → 1; the CS 2 of this char. is homoplasic, but its CS1 is non-homoplasic].

Primates (clade 4: *Lemur, Propithecus, Loris, Nycticebus, Tarsius, Pithecia, Aotus, Callithrix, Saimiri, Colobus, Cercopithecus, Papio, Macaca, Hylobates, Pongo, Gorilla, Pan, Homo*). Depressor supercilii is a distinct muscle [**35:0** → **1**]. Cricothyroideus is differentiated into a pars recta and a pars obliqua [**51:0** → **1**]. Biceps brachii does not insert onto the ulna [104:0 → 1]. Opponens pollicis is a distinct muscle [143:0 → 1]. Opponens digiti minimi is a distinct muscle [148:0 → 1]. Three of the five features supporting this clade concern the PU muscles. Unlike the parsimony and Bayesian analyses of the PU dataset (Fig. 4), analyses of the HN dataset do not recover this clade (Fig. 3), although it is strongly supported in the analyses of the complete dataset (BSV 81, CSV 86; Fig. 2). The biceps brachii not inserting onto the ulna and the undifferentiated opponens digiti minimi are features shared with *Rattus* (note that in numerous other non-euarchontan mammals the biceps brachii is at least partially inserted onto the ulna, and the opponens digiti minimi is undifferentiated: e.g. Jouffroy, 1971). Within primates, the opponens pollicis became secondarily undifferentiated in *Callithrix*.

Strepsirrhini (clade 5: *Lemur, Propithecus, Loris, Nycticebus*). Geniohyoideus is fused to its counterpart in the midline [57:0 → 1]. Digit 4 is the functional axis of intermetacarpales/dorsal interossei [**141:0** → **1**]. Interossei accessorii are present [142:0 → 1]. Two of the three features supporting this clade concern the PU muscles and, unlike the parsimony and Bayesian analyses of the complete (Fig. 2) and PU (Fig. 4) datasets, the analyses of the HN dataset do not recover this clade (Fig. 3). The interossei accessorii were independently acquired in *Hylobates*, while the fusion of the geniohyoideus to its counterpart was independently acquired in *Tupaia*, Hominini and Cercopithecidae, and then secondarily lost in *Papio*.

Lemuriformes (clade 6: *Lemur, Propithecus*). Stylohyoideus is inserted near the midline [**12:0** → **1**]. *Reversion of 'Biceps brachii has no bicipital aponeurosis' [105:1 → 0].* Unlike the parsimony and Bayesian analyses of the complete (Fig. 2) and HN (Fig. 3) datasets, the analyses of the PU dataset do not recover this clade (Fig. 4). The bicipital aponeurosis was lost in the Euarchonta, but became secondarily differentiated in lemuriforms.

Lemur (terminal taxon) No unambiguous apomorphies.

Propithecus (terminal taxon) Sphincter colli profundus is not a distinct muscle [24:0 → 1].

Lorisiformes (clade 7: *Loris, Nycticebus*). Trapezius inserts onto the clavicle [45:0 → 1]. Pectoralis major has no clavicular origin [78:0 → 1]. Biceps brachii has no short head [**100:0** → **1**]. Epitrochleoanconeus is not a distinct muscle [120:0 → 1]. Opponens pollicis reaches the distal portion of metacarpal [144:0 → 1]. Supinator has no ulnar head [155:0 → 1]. Extensor digiti minimi inserts onto digit 5 only [159:0 → 1]. The support for this clade in the parsimony and Bayesian analyses of the complete dataset and of the PU dataset is particularly strong (BSV 99 and CSV 99, complete dataset: Fig. 2; BSV 100 and CSV 100, PU dataset: Fig. 4). The clavicular origin of the pectoralis major was independently lost in *Pongo* and the Cercopithecinae, while the insertion of the trapezius onto the clavicle was independently acquired in anthropoids, and then secondarily lost in *Callithrix*. The epitrochleoanconeus became undifferentiated in hominoids and then became differentiated again in *Pan*, while the ulnar origin of the supinator was independently lost in anthropoids. The contact between the opponens pollicis and the distal portion of metacarpal I was independently acquired in catarrhines. It is puzzling why the lorisiforms share so many muscular homoplasies with the so-called 'higher' primates; it is remarkable, for instance, that each of the six homoplasic features supporting the *Loris* + *Nycticebus* clade is actually present in one or more of the extant hominoid genera (see Appendix 1 for more details).

Loris (terminal taxon) Flexor digitorum superficialis does not insert onto digit 2 [**116:0** → **1**].

Nycticebus (terminal taxon) No unambiguous apomorphies.

Haplorrhini (clade 8: *Tarsius, Pithecia, Aotus, Callithrix, Saimiri, Colobus, Cercopithecus, Papio, Macaca, Hylobates, Pongo, Gorilla, Pan, Homo*). Jugulohyoideus is not a distinct muscle [15:0 → 1]. Serratus anterior and levator scapulae are slightly separated [**68:0 → 1**]. Flexor carpi radialis inserts onto the metacarpals II and III [121:0 → 1]. There are more than two contrahentes digitorum [133:0 → 1]. Adductor pollicis has slightly differentiated transverse and oblique heads [**138:0 → 1**]. As explained in the Section above, the clade Haplorrhini (i.e. *Tarsius* + Anthropoidea) is more strongly supported by PU than by HN characters (Fig. 3) and the Bayesian analysis of the PU dataset, which resulted in a particularly high CSV (90; Fig. 4), is one of the few anatomical cladistic analyses to provide strong support for the Haplorrhini. The jugulohyoideus was independently lost in *Rattus* (it is present in many other non-euarchontan mammals: see Saban, 1968; Diogo et al. 2008b). The adductor pollicis became weakly differentiated into transverse and oblique heads in the Haplorrhini, and then these heads became further differentiated in catarrhines. The insertion of the flexor carpi radialis onto metacarpals II and III was independently acquired in *Tupaia*, while the serratus anterior and the levator scapulae became further separated in hominoids.

Tarsius (terminal taxon). *Reversion of 'Digastricus anterior is not in contact with its counterpart for most of its length' [3:1 → 0]*. Zygomatico-auricularis is a distinct muscle [**21:0 → 1**]. *Reversion of 'Spinotrapezius is not a distinct muscle' [43:1 → 0]*. Sternocleidomastoideus is hypertrophied [**49:0 → 1**]. *Reversion of 'Chondroglossus is present as a distinct bundle of the hyoglossus' [58:1 → 0]*. Short and long heads of biceps brachii are completely separated [**101:0 → 1**]. Lumbricales originate from thin flexor digitorum profundus tendons [**128:0 → 1**]. Two sets of contrahentes digitorum are present [**132:0 → 1**]. There are contrahentes digitorum to digits 2, 3, 4 and 5 [**134:0 → 1**]. Contrahentes digitorum have a peculiar configuration [**135:0 → 1**]. Brachioradialis often inserts onto the trapezium [**152:0 → 1**]. Phenotypically, *Tarsius* is one of the most peculiar primates, exhibiting a mix of derived (e.g. presence of a zygomatico-auricularis and of two sets of contrahentes) and plesiomorphic (e.g. presence of a separate spinotrapezius) features that are not present in any other living primate taxon.

Anthropoidea (clade 9: *Pithecia, Aotus, Callithrix, Saimiri, Colobus, Cercopithecus, Papio, Macaca, Hylobates, Pongo, Gorilla, Pan, Homo*). Chorda tympani passes above the tensor tympani [**7:0 → 1**]. Pterygoideus lateralis has well differentiated inferior and superior heads [9:0 → 1]. Zygomaticus major is not directly originated from the ear [**31:0 → 1**]. Depressor anguli oris is a distinct muscle [39:0 → 1]. Trapezius inserts onto the clavicle [45:0 → 1]. Supinator has no ulnar head [155:0 → 1]. The support for this clade is particularly strong (e.g. BSV 98 and CSV 100, complete dataset: Fig. 2; CSV 100, HN dataset: Fig. 3; CSV 98, PU dataset: Fig. 4). The insertion of the trapezius onto the clavicle was secondarily lost in *Callithrix*, and independently acquired in lorisiforms. The ulnar origin of the supinator was independently lost in lorisiforms, the superior and inferior heads of the pterygoideus lateralis became, secondarily, mainly undifferentiated in *Callithrix*, and the depressor anguli oris also became secondarily undifferentiated in this latter genus.

Platyrrhini (clade 10: *Pithecia, Aotus, Callithrix, Saimiri*). 'Zygomaticus' is the only well developed zygomatic muscle in the cheek region [**27:0 → 1**]. Styloglossus originates from small portion of stylomandibular ligament [**60:0 → 1**]. Pectoralis major has a pars capsularis in at least some specimens [**82:0 → 1**]. Strong fascial connection between the dorsoepitrochlearis and the subscapular fascia and/or the scapula is present [**94:0 → 1**]. Strong fascial connection between the triceps brachii and the scapular spine and/or the axillary region is present [98:0 → 1]. Flexor brevis profundus 2 is not a distinct muscle [139:0 → 1]. Extensor indicis usually inserts onto digits 2–4 [162:0 → 2, unordered]. Extensor pollicis longus is deeply blended with the extensor indicis [163:0 → 1]. Extensor pollicis longus plus extensor indicis send two tendons to digit 2 [164:0 → 1]. The support for this clade is also particularly strong (e.g. BSV 89 and CSV 99, complete dataset: Fig. 2; BSV 95 and CSV 100, PU dataset: Fig. 4), but comes mainly from PU features; the support in the analyses of the HN dataset is not strong (Fig. 3). The deep blending of the extensor pollicis longus with the extensor indicis was independently acquired in *Tupaia*, while the insertion of the extensor indicis onto digits 2–4 was independently acquired in *Hylobates*. The presence of two tendons of the extensor pollicis longus + extensor indicis to digit 2 is a feature also found (homoplasically) in *Tupaia* and in *Colobus*.

Pithecia (terminal taxon) Panniculus carnosus is not a distinct muscle [85:0 → 1]. Coracobrachialis profundus is not present as a distinct head of the coracobrachialis [107:0 → 1].

Cebidae + Aotidae (clade 11: *Aotus, Callithrix, Saimiri*). *Reversion of 'Chondroglossus is present as a distinct bundle of the hyoglossus' [58:1 → 0].* This clade is expected (Fig. 1) and is recovered in (but not strongly supported by) the analyses of the complete and HN datasets (Figs 2 and 3); it is not recovered in the analyses of the PU dataset (Fig. 4). The chondroglossus was differentiated in the Euarchonta but became secondarily undifferentiated in this clade (Cebidae + Aotidae), as well as in *Tarsius*.

Aotus (terminal taxon) Hyoglossus is partially or completely fused with the thyrohyoideus [59:0 → 1].

Cebidae (clade 12: *Callithrix, Saimiri*). Stylohyoideus is not a distinct muscle [10:0 → 1]. Stylopharyngeus originates from the stylomandibular ligament [**41:0 → 1**]. Styloglossus originates from large area of stylomandibular ligament [**60:1 → 2, ordered**]. This clade is recovered in the analyses of the complete and HN datasets (with weak support in the

parsimony analyses, but considerable support in the Bayesian analyses – BSV 88 and BSV 81, respectively: Figs 2 and 3), but not of the PU dataset (Fig. 4). As explained above, in Fabre et al.'s (2009) study, *Saimiri* is closer to *Aotus* than to *Callithrix* (i.e. the Cebidae is not monophyletic). However, in Arnold et al.'s (2010) study and in the most recent and comprehensive molecular analysis of platyrrhine relationships (Wildman et al. 2009), it is closer to *Callithrix*, as it is in our study (Figs 1 and 2). The stylohyoideus was independently lost in *Cynocephalus*.

Callithrix (terminal taxon). *Reversion of 'Pterygoideus lateralis has well differentiated inferior and superior heads' [9:1 → 0]. Reversion of 'Depressor anguli oris is a distinct muscle' [39:1 → 0]. Reversion of 'Trapezius inserts onto the clavicle' [45:1 → 0]*. Trapezius does not originate from the cranium [48:0 → 1]. Anterior portion of sternothyroideus extends anteriorly to the posterior portion of the thyrohyoideus [64:0 → 1]. *Reversion of 'Rhomboideus major and rhomboideus minor are not distinct muscles' [69:1 → 0]. Reversion of 'Opponens pollicis is a distinct muscle' [143:1 → 0]*.

Saimiri (terminal taxon). *Reversion of 'Digastricus anterior is not in contact with its counterpart for most of its length' [3:1 → 0]. Reversion of 'Frontalis is a distinct muscle' [32:1 → 0]*.

Catarrhini (clade 13: *Colobus, Cercopithecus, Papio, Macaca, Hylobates, Pongo, Gorilla, Pan, Homo*). Depressor septi nasi is a distinct muscle [**38:0 → 1**]. Latissimus dorsi and teres major are fused [89:0 → 1]. Adductor pollicis has distinct transverse and oblique heads [**138:1 → 2, ordered**]. Opponens pollicis reaches the distal portion of metacarpal [144:0 → 1]. Opponens digiti minimi is slightly differentiated into superficial and deep bundles [149:0 → 1]. This clade is strongly supported in the analyses of the complete and PU datasets (e.g. CSV 100 and CSV 98 in the Bayesian analyses of these datasets, respectively: Figs 2 and 3). It is not recovered in the parsimony analysis of the HN dataset, but it is recovered (CSV 76) in the Bayesian analysis of this latter dataset (Fig. 3). The adductor pollicis became weakly differentiated into transverse and oblique heads in the Haplorrhini, and then these heads became further differentiated in catarrhines. The fusion between the latissimus dorsi and teres major was independently acquired in *Tupaia*, and secondarily lost in Homininae. The opponens digiti minimi became slightly differentiated into superficial and deep bundles in the Catarrhini, and then these heads became further separated in cercopithecids.

Cercopithecidae (clade 14: *Colobus, Cercopithecus, Papio, Macaca*). Stylohyoideus is partially pierced by the digastricus posterior and/or by the intermediate digastric tendon [11:0 → 1]. Geniohyoideus is fused to its counterpart in the midline [57:0 → 1]. Flexor digitorum profundus is not innervated by the ulnar nerve [**111:0 → 1**]. Opponens digiti minimi has well separated superficial and deep bundles [**149:1 → 2, ordered**]. This clade is recovered (with weak support) in the parsimony analyses of the complete and HN datasets and in the Bayesian analysis of the HN dataset, but not in the parsimony analysis of the PU dataset and in the Bayesian analyses of the complete and PU datasets (Figs 2–4). The pierced stylohyoideus was independently acquired in the Homininae and *Tupaia*. The opponens digiti minimi became weakly differentiated into superficial and deep bundles in the Catarrhini and then these heads became further differentiated in cercopithecids. The fusion of the geniohyoideus to its counterpart was secondarily lost in *Papio*, and independently acquired in *Tupaia*, Hominini and Strepsirrhines.

Colobus (terminal taxon). Tendon of flexor digitorum profundus to digit 1 is vestigial or absent [112:0 → 1]. Palmaris brevis is hypertrophied [**126:0 → 1**]. Extensor pollicis longus is deeply blended with the extensor indicis [163:0 → 1]. Extensor pollicis longus plus extensor indicis send two tendons to digit 2 [164:0 → 1].

Cercopithecinae (clade 15: *Cercopithecus, Papio, Macaca*). Platysma myoides is divided into a superior, superficial bundle, and an inferior, deep bundle [**17:0 → 1**]. Anterior portion of zygomaticus major passes partially or completely deep to the levator anguli oris facialis [28:0 → 1]. Pectoralis major has no clavicular origin [78:0 → 1]. This clade is expected (Fig. 1) and is recovered in the parsimony analyses of the complete, HN and PU datasets (with weak support: Figs 2–4) and in the Bayesian analyses of the complete and HN datasets (with considerable support, i.e. CSV 77, CSV 78, respectively: Figs 2–3). It is not recovered in the Bayesian analysis of the PU dataset (Fig. 4). The clavicular origin of the pectoralis major was independently lost in *Pongo* and the lorisiforms. The passage of the anterior portion of the zygomaticus major partially or completely deep to the levator anguli oris facialis is a feature that was independently acquired in *Hylobates*.

Cercopithecus (terminal taxon). *Reversion of 'Sphincter colli profundus is not a distinct muscle' [24:1 → 0]*.

Papionini (clade 16: *Papio, Macaca*) *Reversion of 'Digastricus anterior is not in contact with its counterpart for most of its length' [3:1 → 0]*. Hyoglossus is partially or completely fused with the thyrohyoideus [59:0 → 1]. Abductor digiti minimi is divided into two well differentiated heads [**151:0 → 1**]. This clade is expected (Fig. 1) and is strongly supported in the present study (e.g. BSV 83, CSV 98, complete dataset: Fig. 2), being recovered in the analyses of the complete, HN and PU datasets (Figs 2–4). The fusion between the hyoglossus and the thyrohyoideus was independently acquired in *Cynocephalus* and in *Aotus*, while the separation between the digastricus anterior and its counterpart was acquired in the Primatomorpha and then independently lost in *Tarsius*, *Saimiri* and the Papionini.

Papio (terminal taxon). Trapezius inserts onto ≥ lateral 1/3 of the clavicle [46:0 → 1]. Long head of triceps brachii is divided into a thinner, deep bundle and a broader, superficial bundle [**95:0 → 1**].

Macaca (terminal taxon). *Reversion of 'Cricoarytenoideus posterior does not meet its counterpart at the dorsal midline' [56:1 → 0]. Reversion of 'Geniohyoideus is fused to its counterpart in the midline' [57:1 → 0]*.

Hominoidea (clade 17: *Hylobates, Pongo, Gorilla, Pan, Homo*). *Reversion of 'Temporalis has a pars suprazygomatica' [8:1 → 0]*. Anterior portion of sternothyroideus extends anteriorly to the posterior portion of the thyrohyoideus [64:0 → 1]. Serratus anterior and levator scapulae are well separated from each other [**68:1 → 2, ordered**]. Levator scapulae does not extend to C5 [**71:0 → 1**]. Pectoralis minor inserts onto the coracoid process [83:0 → 1]. Panniculus carnosus is not a distinct muscle [85:0 → 1]. Dorsoepitrochlearis does not insert onto the olecranon process of the ulna [**92:0 → 1**]. Coracobrachialis profundus is not present as a distinct head of the coracobrachialis [107:0 → 1]. Flexor digitorum superficialis originates from the radius [**113:0 → 1**]. Flexor digitorum superficialis originates from the ulna [**114:0 → 1**]. Epitrochleoanconeus is not a distinct muscle [120:0 → 1]. Pronator teres is often (but not usually, i.e. in < 50% of the cases) originated from the ulna [**124:0 → 1**]. Monophyly of this clade is strongly supported by the Bayesian and parsimony analyses of the complete and PU datasets (BSV 100 and CSV 100 in the analyses of both these datasets: Figs 2 and 4). Only two of the 12 synapomorphies listed above concern PU features, and the clade is not so strongly supported in the analyses of the HN dataset (BSV 56, CSV 77); this suggests that the muscle-related phenotypic changes leading to the origin of hominoids were probably mainly associated to postcranial adaptations. The anterior extension of the sternothyroideus was secondarily lost in *Homo* and independently acquired in *Callithrix* and *Rattus*; the insertion of the pectoralis minor onto the coracoid process was secondarily lost in *Pan* and was independently acquired in *Cynocephalus* and *Rattus*; the coracobrachialis profundus was independently lost in *Pithecia* and *Rattus* (note that numerous other non-euarchontan mammals have a coracobrachialis profundus and do not have an anterior extension of the sternothyroideus nor an insertion of the pectoralis minor onto the coracoid process: e.g. Saban, 1968; Jouffroy, 1971). The serratus anterior and the levator scapulae became slightly separated in the Haplorrhini and then further separated in hominoids. The panniculus carnosus was independently lost in *Pithecia*, while the epitrochleoanconeus became undifferentiated in lorisiforms and in hominoids, and then became secondarily differentiated in *Pan*.

Hylobates (terminal taxon). Anterior portion of zygomaticus major passes partially or completely deep to the levator anguli oris facialis [28:0 → 1]. Trapezius does not originate from the cranium [48:0 → 1]. Thyroideus transversus is a distinct muscle [**52:0 → 1**]. *Reversion of 'Pterygopharyngeus is not a distinct muscle' [53:1 → 0]. Reversion of 'Levator claviculae inserts onto a more medial portion of the clavicle' [**76:1 → 0**]*. Subclavius originates from the third rib [**77:0 → 1**]. Pectoralis major is blended with the biceps brachii [81:0 → 1]. Pectoralis minor inserts onto the clavicle [**84:0 → 1**]. Subscapularis has a distinct pars posterioris [**88:0 → 1**]. Dorsoepitrochlearis is blended with the biceps brachii [**93:0 → 1**]. Short head of biceps brachii originates from the humerus [**102:0 → 1**]. Biceps brachii is blended with the flexor digitorum superficialis [**103:0 → 1**]. Bicipital aponeurosis (of biceps brachii) forms a 'lacertus carnosus' [**106:0 → 1**]. Flexor pollicis longus is a distinct muscle [109:0 → 1]. There are frequently three, or instead usually seven, lumbricales [**129:0 → 1**]. Lumbricales originate from the dorsal surfaces of the tendons of the flexor digitorum profundus [**130:0 → 1**]. Main body of adductor pollicis inserts onto much of metacarpal I [**137:0 → 1**]. Interossei accessorii are present [142:0 → 1]. Opponens pollicis inserts onto the proximal and/or the distal phalanges of the thumb [**145:0 → 1**]. Flexor digiti minimi brevis is partly originated from the pisiform [146:0 → 1]. Flexor digiti minimi brevis inserts onto the middle phalanx and/or the distal phalanx of digit 5 [147:0 → 1]. Anconeus is not a distinct muscle [**157:0 → 1**]. Extensor indicis usually inserts onto digits 2–4 [162:0 → 2, unordered]. Extensor pollicis brevis is a distinct muscle [166:0 → 1]. Twenty of the 24 apomorphies listed above concern PU features, which are likely related to the adaptations of hylobatids to an arm-over-arm brachiating lifestyle (e.g. Andrews & Groves, 1976; Michilsens et al. 2009; see also the Section below). The passage of the anterior portion of the zygomaticus major partially or completely deep to the levator anguli oris facialis is a feature that was independently acquired in the Cercopithecinae. The cranial origin of the trapezius was independently lost in *Callithrix*, the blending of the pectoralis major with the biceps brachii was independently acquired in *Gorilla*, and the separate flexor pollicis longus and separate extensor pollicis brevis were independently acquired in modern humans. The interossei accessorii are also present (homoplasically) in strepsirrhines, and the partial origin of the flexor digiti minimi brevis from the pisiform in *Cynocephalus*. The insertion of the extensor indicis onto digits 2–4 was independently acquired in platyrrhines.

Hominidae (clade 18: *Pongo, Gorilla, Pan, Homo*). 'Cervico-auriculo-occipitalis' is not a distinct bundle of the occipitalis [**18:0 → 1**]. Thyroarytenoideus is not differentiated into a pars superior and a pars inferior [**55:0 → 1**]. Flexor digitorum profundus is not originated from the medial epicondyle of the humerus or from the common flexor tendon [110:0 → 1]. Tendon of flexor digitorum profundus to digit 1 is vestigial or absent [112:0 → 1]. Pronator teres is usually (≥ 50% of the cases) originated from the ulna [**124:1 → 2, ordered**]. Contrahentes digitorum are missing [131:0 → 1]. This clade is recovered in (but not strongly supported by) both the parsimony and Bayesian analyses of the complete and HN datasets (Figs 2 and 3). However, the PU dataset does not recover hominid monophyly because hylobatids share some PU homoplasies with the African apes

and modern humans (e.g. no rhomboideus occipitalis [char. 70], a bicipital aponeurosis [char. 105], and insertion of the extensor digiti minimi onto digit 5 only [char. 159]; Fig. 4). It should however be emphasized that three (50%) of the six synapomorphies listed above for this family Hominidae are well-defined unique (i.e. non-homoplasic) features from both the HN and the PU regions. Of the other synapomorphies that also occur elsewhere within the primate clade, the atrophy of the tendon of the flexor digitorum profundus to digit 1 was independently acquired in *Colobus* and it was secondarily reverted (i.e. it is *not* atrophied) in modern humans. The exclusive origin of the flexor digitorum profundus from the forearm structures is also usually found in *Macaca* but is not found in any non-catarrhine primate studied by us (*Papio* and *Colobus* were coded as '?', so it is not clear whether this feature was acquired in the Cercopithecidae, or in a subgroup of this clade). The absence of distinct contrahentes digitorum, which is a derived state, is secondarily reverted in *Pan* (i.e. alone among the Hominidae *Pan* has distinct contrahentes digitorum).

Pongo (terminal taxon). Digastricus anterior is not a distinct muscle [**2:0** → **1**]. Stylolaryngeus is a distinct muscle [**13:0** → **1**]. Digastricus posterior is directly attached onto the mandible [**14:0** → **1**]. Auricularis posterior is not a distinct muscle [**19:0** → **1**]. Pectoralis major has no clavicular origin [78:0 → 1]. The clavicular origin of the pectoralis major was independently lost in lorisiforms and the Cercopithecinae. Four of the five apomorphies listed above are HN features; these four features are non-homoplasic, and three of them concern the loss/de-differentiation of muscles. *Pongo* is the single extant hominoid taxon that has more HN apomorphies than PU apomorphies in Fig. 2; thus, despite their unusual locomotion, these data suggest that cranial adaptations may have played a particularly important role in the origin/evolution of orangutans.

Homininae (clade 19: *Gorilla, Pan, Homo*). Stylohyoideus is partially pierced by the digastricus posterior and/or by the intermediate digastric tendon [11:0 → 1]. Platysma cervicale is not a distinct muscle [**16:0** → **1**]. Risorius is a distinct muscle [**22:0** → **1**]. Omohyoideus occasionally has three bellies [**67:0** → **1**]. *Reversion of 'Latissimus dorsi and teres major are fused' [89:1 → 0]*. Palmaris longus is absent in > 5% of the cases [**118:0** → **1**]. Thin, deep additional slip of adductor pollicis (TDAS-AD, or 'interosseous volaris primus of Henle' of modern human anatomy) is often (i.e. in < 50% of the cases) present [**136:0** → **1**]. Extensor indicis usually inserts onto digit 2 only [162:0 → 3, unordered; CS 2 of this char. is homoplasic, but CS3 is non-homoplasic]. Monophyly of this subfamily is strongly supported by these HN and PU synapomorphies (e.g. BSV 92 and CSV 100, complete dataset: Fig. 2). Among the 8824 trees obtained from the heuristic bootstrap analysis of our complete dataset, not one recovered the *Pongo*-human clade. Note that char. 162 is shown as homoplasic in the tree of Fig. 2 and in the list above because its character state 2 is homoplasic (independently acquired in platyrrhines and *Hylobates*), but its character state 3 is unique to the African ape and modern human clade. Therefore, six of the eight synapomorphies of the Homininae are non-homoplasic. Of the two homoplasic synapomorphies, a pierced stylohyoideus was independently acquired in the Cercopithecidae and *Tupaia*, while a fused latissimus dorsi and teres major was independently acquired in *Tupaia* and the Catarrhini, and secondarily lost in this clade Homininae.

Gorilla (terminal taxon), Pectoralis major inserts onto the coracoid process [**80:0** → **1**]. Pectoralis major is blended with the biceps brachii [81:0 → 1]. The blending of the pectoralis major with the biceps brachii was independently acquired in *Hylobates*.

Hominini (clade 20: *Pan, Homo*). Geniohyoideus is fused to its counterpart in the midline [57:0 → 1]. Styloglossus has a distinct oblique slip running anteroinferiorly to blend with the lateral portion of the hyoglossus [**61:0** → **1**]. Sternohyoideus does not contact nor lie against its counterpart for most of its length [63:0 → 1]. Omohyoideus has an intermediate tendon [66:0 → 1]. As noted above, the chimp-modern human clade is given strong support in the parsimony and Bayesian analyses of the complete (BSV 75, CSV 94) and particularly of the HN (BSV 86, CSV 99) datasets, and one of its four synapomorphies is non-homoplasic (char. 61). Because all of these four synapomorphies concern HN features, the (*Pan, Homo*) clade is not recovered in the analyses of the PU dataset (Fig. 4). The fusion of the geniohyoideus to its counterpart was independently acquired in *Tupaia*, Strepsirrhines and Cercopithecidae, and then secondarily lost in *Papio*. The sternohyoideus not contacting or lying against its counterpart was independently acquired in *Cynocephalus*, and the intermediate tendon of the omohyoideus was independently acquired in *Tupaia*.

Pan (terminal taxon). *Reversion of 'Pectoralis minor inserts onto the coracoid process' [83:1 → 0]. Reversion of 'Epitrochleoanconeus is not a distinct muscle' [120:1 → 0]. Reversion of 'Contrahentes digitorum are missing' [131:1 → 0]. Reversion of 'Flexores breves profundi are fused with the intermetacarpales, forming the dorsal interossei' [140:1 → 0].* The insertion of the pectoralis minor onto the coracoid process was independently acquired in *Cynocephalus*, *Rattus* and hominoids, and then secondarily lost in *Pan*. The contrahentes digitorum became undifferentiated in hominids, and the epitrochleoanconeus became undifferentiated in lorisiforms and in hominoids; the contrahentes digitorum and the epitrocheoanconeus then became secondarily differentiated in *Pan* (i.e. *Pan* has contrahentes digitorum and has an epitrochleoanconeus).

Homo (terminal taxon). *Reversion of 'Anterior portion of sternothyroideus extends anteriorly to the posterior portion of the thyrohyoideus' [64:1 → 0]. Reversion of 'rhomboideus major and rhomboideus minor are not distinct muscles' [69:1 → 0]*. Levator claviculae is not a distinct muscle [**72:0** → **1**]. Dorsoepitrochlearis is not a distinct muscle

[**91:0 → 1**]. Flexor pollicis longus is a distinct muscle [109:0 → 1]. *Reversion of 'Tendon of flexor digitorum profundus to digit 1 is vestigial or absent' [112:1 → 0]*. *Reversion of 'Flexor carpi radialis originates from the radius' [123:1 → 0]*. Thin, deep additional slip of adductor pollicis (TDAS-AD, or 'interosseous volaris primus of Henle' of modern human anatomy) is usually (i.e. in < 50% of the cases) present [136:1 → 2, ordered]. Extensor pollicis brevis is a distinct muscle [166:0 → 1]. The anterior extension of the sternothyroideus was independently acquired in *Callithrix*, *Rattus* and hominoids, and then secondarily lost in modern humans. The atrophy of the tendon of the flexor digitorum profundus to digit 1 was independently acquired in *Colobus* and in hominids; the tendon of the flexor digitorum profundus to digit 1 is not atrophied in modern humans, thus this is a secondary reversion. The rhomboideus major and rhomboideus minor became undifferentiated in the Primatomorpha, and then became secondarily differentiated, independently, in modern humans and in taxa such as *Callithrix* (see above). The differentiation of the flexor pollicis longus and of the extensor pollicis brevis seen in modern humans was independently acquired in hylobatids.

Evolution of the primate head, neck, pectoral and upper limb muscles

The primate terminal taxa that appear in more derived positions within the tree shown in Fig. 2 are also generally more derived morphologically (i.e. there is a higher number of unambiguous evolutionary steps – NS – from the base of the tree to those terminal taxa). For example, *Lemur* is one of the least morphologically derived primates in the tree (NS = 25); previous studies have shown that the transition rate of mitochondrial DNA has also been extremely low in *Lemur* (e.g. Hasegawa et al. 1990). However, there are exceptions to this generalization. For example, there are more accumulated steps leading to *Saimiri* (NS = 46) than to the Old World monkeys *Cercopithecus* and *Colobus* (44); to *Callithrix* (51) than to *Cercopithecus* and *Colobus* (44) and to *Macaca* and *Papio* (49); and to *Hylobates* (72) than to *Pongo* (59), *Gorilla* (64) and *Pan* (70) (Fig. 2). The unique evolutionary history of hylobatids is reflected in a peculiar mix of plesiomorphic and derived anatomical structures (Fig. 2; Appendix 1). Hylobatids are an example of mosaic evolution for, although their HN muscles (partial NS = 26) are anatomically less derived than those of hominids (partial NS *Pongo* = 28, *Gorilla* = 28, *Pan* = 32, *Homo* = 33) and various monkeys (partial NS *Saimiri* = 27, *Callithrix* = 30, *Macaca* = 28, *Papio* = 27), their PU muscles are more derived (partial NS = 46) than those of any other taxon, including modern humans (partial NS = 42) (Fig. 2). The highly specialized PU musculature of hylobatids is most likely related to their peculiar brachiating lifestyle (e.g. Andrews & Groves, 1976; Michilsens et al. 2009).

In a recent paper, Bakewell et al. (2007; p. 7492) suggest that their molecular studies show that 'in sharp contrast to common belief, there were more adaptive genetic changes during chimp evolution than during human evolution', that is, their finding 'suggests more unidentified phenotypic adaptations in chimps than in humans'. However, the results of our parsimony and Bayesian analyses indicate that, at least regarding the gross morphology of the HN and PU muscles, since the *Pan*/*Homo* split, humans have evolved faster than chimpanzees [ca. 2.3 times faster according to the lengths of the branches leading to modern humans (9) and to chimpanzees (4) in the parsimony tree of Fig. 2; ca. 2.4 times faster according to the branches leading to modern humans (0.071 changes per character) and to chimpanzees (0.030 changes per character) in the consensus tree obtained from the Bayesian analysis of the complete dataset]. In turn, since the *Gorilla*/Hominini split, gorillas have only accumulated two unambiguous muscular apomorphies, whereas there are respectively 8 (4 + 4) and 13 (4 + 9) unambiguous apomorphies leading to extant chimpanzees and to modern humans (Fig. 2) (since this split, the branch lengths leading to *Gorilla*, *Pan* and *Homo* in the consensus tree obtained from the Bayesian analysis of the complete dataset are 0.018, 0.057 and 0.098, respectively).

It is important to stress that in this case, having a higher number of character state changes in a branch does not mean having a higher number of muscles. For example, some of the nine apomorphies of modern humans shown in Fig. 2 and listed in the section above involve the loss of muscles [e.g. absence of levator claviculae (72); absence of dorsoepitrochlearis (91)]. In fact, as shown in Tables 2–8, which illustrate the evolution of the primate head, neck, pectoral and upper limb muscles and complement the information given in Appendix 1, chimpanzees, along with most other extant primates, have more muscles than modern humans. In the next paragraphs, we briefly summarize and discuss the information provided in these Tables.

The number of mandibular muscles is essentially constant (n = 8) within extant primates, including modern humans; an exception is *Pongo*, which lacks a digastricus anterior (Table 2). With respect to the hyoid muscles (Tables 3 and 8), the predicted plesiomorphic condition for the primate clade is four non-facial hyoid muscles, i.e. more than most extant primates, including modern humans (n = 3). This is because the jugulohyoideus is usually lacking in *Tarsius* and is almost always, if not always, absent in anthropoids. Some phylogenetically derived primates also have more non-facial hyoid muscles than modern humans (e.g. *Pongo* has four muscles because it has a peculiar muscle, stylolaryngeus). However, with respect to the facial muscles, despite lacking three muscles that were plesiomorphically present in primates (platysma cervicale, sphincter colli profundus and mandibulo-auricularis), modern humans do have more facial muscles than any other primate studied by us (n = 24,

Table 2 Scheme illustrating the authors' hypotheses regarding the homologies of the mandibular muscles of adults of representative primate taxa. The nomenclature of the muscles follows that of Diogo & Abdala (2010).

Lemur (8 muscles)	*Tarsius* (8 muscles)	*Aotus* (8 muscles)	*Macaca* (8 muscles)	*Hylobates* (8 muscles)	*Pongo* (7 muscles)	*Gorilla* (8 muscles)	*Pan* (8 muscles)	*Homo* (8 muscles)
Ventral								
Mylohyoideus	Mylohyoideus	Mylohyoideus	Mylohyoideus	Mylohyoideus	Mylohyoideus	Mylohyoideus	Mylohyoideus	Mylohyoideus
Digastricus anterior	Digastricus anterior	Digastricus anterior	Digastricus anterior	Digastricus a nterior	–	Digastricus anterior	Digastricus anterior	Digastricus anterior
Adductor mandibulae								
Masseter	Masseter	Masseter	Masseter	Masseter	Masseter	Masseter	Masseter	Masseter
Temporalis	Temporalis	Temporalis	Temporalis	Temporalis	Temporalis	Temporalis	Temporalis	Temporalis
Pterygoideus lateralis	Pterygoideus lateralis	Pterygoideus lateralis	Pterygoideus lateralis	Pterygoideus lateralis	Pterygoideus lateralis	Pterygoideus lateralis	Pterygoideus lateralis	Pterygoideus lateralis
Pterygoideus medialis	Pterygoideus medialis	Pterygoideus medialis	Pterygoideus medialis	Pterygoideus medialis	Pterygoideus medialis	Pterygoideus medialis	Pterygoideus medialis	Pterygoideus medialis
Tensor tympani	Tensor tympani	Tensor tympani	Tensor tympani	Tensor tympani	Tensor tympani	Tensor tympani	Tensor tympani	Tensor tympani
Tensor veli palatini	Tensor veli palatini	Tensor veli palatini	Tensor veli palatini	Tensor veli palatini	Tensor veli palatini	Tensor veli palatini	Tensor veli palatini	Tensor veli palatini

Data from evidence provided by our own dissections and comparisons and by a review of the literature. Ventral, adductor mandibulae = ventral musculature and adductor mandibulae musculature *sensu* Edgeworth (1935).

not including the small extrinsic muscles of the ear). Examples of facial muscles that are present in modern humans and missing in most other primates are the risorius and the temporoparietalis (Table 3).

Plesiomorphically it is predicted that primates had four, or even five (if both the spinotrapezius and acromiotrapezius were present as distinct muscles, as is the case in extant taxa such as *Tarsius*) true branchial muscles; modern humans usually only have three muscles (trapezius, sternocleidomastoideus and stylopharyngeus) for, as in other hominoids, modern humans usually lack a ceratohyoideus (Tables 4 and 8). The number of pharyngeal muscles is relatively constant within extant primates; modern humans have no autapomorphic, unique pharyngeal muscles nor do they lack any muscle that was predicted to be plesiomorphically present in primates (Tables 4 and 8). However, modern humans, as well as gorillas, do have more laryngeal muscles (n = 5) than most other primates (which usually do not have a distinct arytenoideus obliquus; Tables 4 and 8). With a few exceptions, the number of hypobranchial muscles is essentially constant (n = 11–13) within extant primates, including modern humans. The exceptions mainly concern the presence/absence of the palatoglossus and/or of the omohyoideus, although in some rare cases small muscles derived from the genioglossus may be recognized as distinct structures (e.g. genio-epiglotticus and hyo-epigloticcus in at least some specimens of *Loris*, according to Edgeworth, 1935 and Saban, 1968; Tables 5 and 8).

It is predicted that plesiomorphically primates probably had 17 pectoral muscles (including a deltoideus acromialis et clavicularis and a deltoideus scapularis, as well as a single rhomboideus – not differentiated into a rhomboideus major and a rhomboideus minor). However, modern humans usually only have 14 pectoral muscles (the rhomboideus occipitalis, levator claviculae and panniculus carnosus are missing and the deltoideus is not differentiated into a deltoideus acromialis et clavicularis and a deltoideus scapularis, but the rhomboideus minor and the rhomboideus major are differentiated; Tables 6 and 8). Extant primates generally have the same number of arm muscles (n = 5), but because modern humans lack a dorsoepitrochlearis they have only four muscles (Tables 6 and 8). Forearm muscles in primates usually number between 18 and 19 (Tables 7 and 8); two of the 19 muscles that are predicted to be plesiomorphically present in primates may be missing in some groups (e.g. the epitrochleoanconeus is usually absent in hominoids except *Pan* and the anconeus is usually absent in *Hylobates*). Modern humans, because they usually lack the epitrochleoanconeus but have a flexor pollicis longus and an extensor pollicis brevis, have more forearm muscles than any other primate studied by us (N.B., hylobatids also have a flexor pollicis longus and an extensor pollicis brevis, but they normally lack an anconeus; Tables 7 and 8). With respect to the hand muscles, phylogenetically plesiomorphic primates such as strepsirrhines and *Tarsius* usually have

Table 3 Scheme illustrating the authors' hypotheses regarding the homologies of the hyoid muscles (not including the small facial, extrinsic muscles of the ear) of adults of representative primate taxa. The nomenclature of the muscles follows that of Diogo & Abdala (2010).

Lemur (25 mus. – not ex. ear; 21 are facial)	*Tarsius* (24 mus. – not ex. ear; 21 are facial)	*Aotus* (23 mus. – not ex. ear; 20 are facial)	*Macaca* (26 mus. – not ex. ear; 23 are facial)	*Hylobates* (26 mus. – not ex. ear; 23 are facial)	*Pongo* (26 mus. – not ex. ear; 22 are facial)	*Gorilla* (26 mus. – not ex. ear; 23 are facial)	*Pan* (26 mus. – not ex. ear; 23 are facial)	*Homo* (27 mus. – not ex. ear; 24 are facial)
Dorso-medial hyoid mucles								
Stylohyoideus	Stylohyoideus	Stylohyoideus	Stylohyoideus	Stylohyoideus	Stylohyoideus	Stylohyoideus	Stylohyoideus	Stylohyoideus
Jugulohyoideus	–	–	–	–	–	–	–	–
–	–	–	–	–	Stylolaryngeus	–	–	–
Digastricus posterior	Digastricus posterior	Digastricus posterior	Digastricus posterior	Digastricus posterior	Digastricus posterior	Digastricus posterior	Digastricus posterior	Digastricus posterior
Stapedius	Stapedius	Stapedius	Stapedius	Stapedius	Stapedius	Stapedius	Stapedius	Stapedius
Platysma cervicale	Platysma cervicale	Platysma cervicale	Platysma cervicale	Platysma cervicale	Platysma cervicale	–	–	–
Platysma myoides	Platysma myoides	Platysma myoides	Platysma myoides	Platysma myoides	Platysma myoides	Platysma myoides	Platysma myoides	Platysma myoides
Occipitalis	Occipitalis	Occipitalis	Occipitalis	Occipitalis	Occipitalis	Occipitalis	Occipitalis	Occipitalis
Aur. posterior	Aur. posterior	Aur. posterior	Aur. posterior	Aur. posterior	–	Aur. posterior	Aur. posterior	Aur. posterior
Ex. ear mus.	Ex. ear mus.	Ex. ear mus.	Ex. ear mus.	Ex. ear mus.	Ex. ear mus.	Ex. ear mus.	Ex. ear mus.	Ex. ear mus.
Mandibulo-aur.	–	–	–	–	–	–	–	–
–	–	–	–	–	–	Risorius	Risorius	Risorius
Ventral hyoid mucles								
Sphincter colli prof.	Sphincter colli prof.	Sphincter colli prof.	– (pres. *Cercopithecus*)	–	–	—	–	–
Zygomaticus maj.	Zygomaticus maj.	Zygomaticus	Zygomaticus maj.	Zygomaticus maj.	Zygomaticus maj.	Zygomaticus maj.	Zygomaticus maj.	Zygomaticus maj.
Zygomaticus min.	Zygomaticus min.	–	Zygomaticus min.	Zygomaticus min.	Zygomaticus min.	Zygomaticus min.	Zygomaticus min.	Zygomaticus min.
Frontalis	Frontalis	Frontalis	Frontalis	Frontalis	Frontalis	Frontalis	Frontalis	Frontalis
Auriculo-orbitalis	Auriculo-orbitalis	Auriculo-orbitalis	Auriculo-orbitalis	Auriculo-orbitalis	Auriculo-orbitalis	Auriculo-orbitalis	Auriculo-orbitalis	Aur. anterior
–	–	–	–	–	–	–	–	Temporoparietalis
–	Zygomatico-aur.	–	–	–	–	–	–	–
Aur. superior	Aur. superior	Aur. superior	Aur. superior	Aur. superior	Aur. superior	Aur. superior	Aur. superior	Aur. superior
Orbic. oculi	Orbic. oculi	Orbic. oculi	Orbic. oculi	Orbic. oculi	Orbic. oculi	Orbic. oculi	Orbic. oculi	Orbic. oculi
De. supercilii	De. supercilii	De. supercilii	De. supercilii	De. supercilii	De. supercilii	De. supercilii	De. supercilii	De. supercilii
Corru. supercilii	Corru. supercilii	Corru. supercilii	Corru. supercilii	Corru. supercilii	Corru. supercilii	Corru. supercilii	Corru. supercilii	Corru. supercilii

Table 3 *Continued.*

Lemur (25 mus. – not ex. ear; 21 are facial)	*Tarsius* (24 mus. – not ex. ear; 21 are facial)	*Aotus* (23 mus. – not ex. ear; 20 are facial)	*Macaca* (26 mus. – not ex. ear; 23 are facial)	*Hylobates* (26 mus. – not ex. ear; 23 are facial)	*Pongo* (26 mus. – not ex. ear; 22 are facial)	*Gorilla* (26 mus. – not ex. ear; 23 are facial)	*Pan* (26 mus. – not ex. ear; 23 are facial)	*Homo* (27 mus. – not ex. ear; 24 are facial)
Le. labii sup. al. nasi	Le. labii sup. al. nasi	Le. labii sup. al. nasi	Le. labii sup. al. nasi	Le. labii sup. al. nasi	Le. labii sup. al. nasi	Le. labii sup. al. nasi	Le. labii sup. al. nasi	Le. labii sup. al. nasi
–	–	– (pres. *Callithrix*)	Procerus	Procerus	Procerus	Procerus	Procerus	Procerus
Buccinatorius	Buccinatorius	Buccinatorius	Buccinatorius	Buccinatorius	Buccinatorius	Buccinatorius	Buccinatorius	Buccinatorius
Le. labii sup.	Le. labii sup.	Le. labii sup.	Le. labii sup.	Le. labii sup.	Le. labii sup.	Le. labii sup.	Le. labii sup.	Le. labii sup.
Nasalis	Nasalis	Nasalis	Nasalis	Nasalis	Nasalis	Nasalis	Nasalis	Nasalis
–	–	–	De. septi nasi	De. septi nasi	De. septi nasi	De. septi nasi	De. septi nasi	De. septi nasi
Le. anguli oris fac.	Le. anguli oris fac.	Le. anguli oris fac.	Le. anguli oris fac.	Le. anguli oris fac.	Le. anguli oris fac.	Le. anguli oris fac.	Le. anguli oris fac.	Le. anguli oris fac.
Orbic. Oris	Orbic. oris	Orbic. oris	Orbic. oris	Orbic. oris	Orbic. oris	Orbic. oris	Orbic. oris	Orbic. oris
– (pres. *Nycticebus*)	–	– (pres. some *Callithrix*)	De. labii inf.	De. labii inf.	De. labii inf.	De. labii inf.	De. labii inf.	De. labii inf.
–	–	De. anguli oris	De. anguli oris	De. anguli oris	De. anguli oris	De. anguli oris	De. anguli oris	De. anguli oris
Mentalis	Mentalis	Mentalis	Mentalis	Mentalis	Mentalis	Mentalis	Mentalis	Mentalis

Data from evidence provided by our own dissections and comparisons and by a review of the literature. The black arrows indicate the hypotheses that are most strongly supported by the evidence available; the grey arrows indicate alternative hypotheses that are supported by some of the data, but overall they are not as strongly supported by the evidence available as are the hypotheses indicated by black arrows.
al., alaeque; aur., auricularis; corru., corrugator; fac., facialis; de., depressor; ex., extrinsic; inf., inferioris; le., levator; maj., major; min., minor; mus., muscles; orbic., orbicularis; pres., present in; prof., profundus; sup., superioris.

Table 4 Scheme illustrating the authors' hypotheses regarding the homologies of the branchial muscles of adults of representative primate taxa; note that in the present work the vocalis is considered to be part of the muscle thyroarytenoideus (see caption of Table 3).

Lemur (14–16 muscles)	*Tarsius* (16–17 muscles)	*Aotus* (14–16 muscles)	*Macaca* (15 muscles)	*Hylobates* (17 muscles)	*Pongo* (14–15 muscles)	*Gorilla* (15–16 muscles)	*Pan* (15 musles)	*Homo* (16 musles)
True branchial mus.								
Stylopharyngeus	Stylopharyngeus	Stylopharyngeus	Stylopharyngeus	Stylopharyngeus	Stylopharyngeus	Stylopharyngeus	Stylopharyngeus	Stylopharyngeus
Ceratohyoideus	Ceratohyoideus	Ceratohyoideus	Ceratohyoideus	–	–	–	–	–
Trapezius	Acromiotrapezius	Trapezius	Trapezius	Trapezius	Trapezius	Trapezius	Trapezius	Trapezius
– (pres. other mammals)	Spinotrapezius	–	–	–	–	–	–	–
Sternocleidomas.	Sternocleidomas.	Sternocleidomas.	Sternocleidomas.	Sternocleidomas.	Sternocleidomas.	Sternocleidomas.	Sternocleidomas.	Sternocleidomas.
Pharyngeal mus.								
Co. pharyngis medius	Co. pharyngis medius	Co. pharyngis medius	Co. pharyngis medius	Co. pharyngis medius	Co. pharyngis medius	Co. pharyngis medius	Co. pharyngis medius	Co. pharyngis medius
Co. pharyngis inferior	Co. pharyngis inferior	Co. pharyngis inferior	Co. pharyngis inferior	Co. pharyngis inferior	Co. pharyngis inferior	Co. pharyngis inferior	Co. pharyngis inferior	Co. pharyngis inferior
Cricothyroideus	Cricothyroideus	Cricothyroideus	Cricothyroideus	Cricothyroideus	Cricothyroideus	Cricothyroideus	Cricothyroideus	Cricothyroideus
–	–	–	–	Thyroideus transversus	–	–	–	–
Co. pharyngis sup.	Co. pharyngis sup.	Co. pharyngis sup.	Co. pharyngis sup.	Co. pharyngis sup.	Co. pharyngis sup.	Co. pharyngis sup.	Co. pharyngis sup.	Co. pharyngis sup.
– (pres. other mammals)	–	–	–	Pterygopharyngeus	–	–	–	–
Palatopharyngeus	Palatopharyngeus	Palatopharyngeus	Palatopharyngeus	Palatopharyngeus	Palatopharyngeus	Palatopharyngeus	Palatopharyngeus	Palatopharyngeus
? (pres. other mammals)	Musculus uvulae	– (pres. *Saimiri*)	Musculus uvulae	Musculus uvulae	Musculus uvulae	Musculus uvulae	Musculus uvulae	Musculus uvulae
Levator veli palatini	Levator veli palatini	Levator veli palatini	Levator veli palatini	Levator veli palatini	Levator veli palatini	Levator veli palatini	Levator veli palatini	Levator veli palatini
– (pres. other mammals)	?	?	–	Salpingopharyngeus	?	?	Salpingopharyngeus	Salpingopharyngeus
Laryngeal mus.								
Thyroarytenoideus	Thyroarytenoideus	Thyroarytenoideus	Thyroarytenoideus	Thyroarytenoideus	Thyroarytenoideus	Thyroarytenoideus	Thyroarytenoideus	Thyroarytenoideus
Cricoarytenoideus lat.	Cricoarytenoideus lat.	Cricoarytenoideus lat.	Cricoarytenoideus lat.	Cricoarytenoideus lat.	Cricoarytenoideus lat.	Cricoarytenoideus lat.	Cricoarytenoideus lat.	Cricoarytenoideus lat.
Arytenoideus	Arytenoideus	Arytenoideus	Arytenoideus	Arytenoideus	Arytenoideus	Arytenoideus transversus	Arytenoideus	Arytenoideus transvers.
–	–	–	–	–	–	Arytenoideus obliquus	–	Arytenoideus obliquus
Cricoarytenoideus post.	Cricoarytenoideus post.	Cricoarytenoideus post.	Cricoarytenoideus post.	Cricoarytenoideus post.	Cricoarytenoideus post.	Cricoarytenoideus post.	Cricoarytenoideus post.	Cricoarytenoideus post.

co., constrictor; lat., lateralis; mus., muscles; post., posterior; pres., present in; sternocleidomas., sternocleidomastoideus; sup., superior; transvers., transversus.

Table 5 Scheme illustrating the authors' hypotheses regarding the homologies of the hypobranchial muscles of adults of representative primate taxa (see caption of Table 3).

Lemur (12 muscles)	*Tarsius* (12 muscles)	*Aotus* (11–12 muscles)	*Macaca* (13 muscles)	*Hylobates* (13 muscles)	*Pongo* (12–13 muscles)	*Gorilla* (13 muscles)	*Pan* (13 muscles)	*Homo* (13 muscles)
'Genio-hyoideus'								
Geniohyoideus	Geniohyoideus	Geniohyoideus	Geniohyoideus	Geniohyoideus	Geniohyoideus	Geniohyoideus	Geniohyoideus	Geniohyoideus
Genioglossus	Genioglossus	Genioglossus	Genioglossus	Genioglossus	Genioglossus	Genioglossus	Genioglossus	Genioglossus
Longitudinalis superior	Longitudinalis superior	Longitudinalis superior	Longitudinalis superior	Longitudinalis superior	Longitudinalis superior	Longitudinalis superior	Longitudinalis superior	Longitudinalis superior
Longitudinalis inferior	Longitudinalis inferior	Longitudinalis inferior	Longitudinalis inferior	Longitudinalis inferior	Longitudinalis inferior	Longitudinalis inferior	Longitudinalis inferior	Longitudinalis inferior
Transversus linguae	Transversus linguae	Transversus linguae	Transversus linguae	Transversus linguae	Transversus linguae	Transversus linguae	Transversus linguae	Transversus linguae
Verticalis linguae	Verticalis linguae	Verticalis linguae	Verticalis linguae	Verticalis linguae	Verticalis linguae	Verticalis linguae	Verticalis linguae	Verticalis linguae
Hyoglossus	Hyoglossus	Hyoglossus	Hyoglossus	Hyoglossus	Hyoglossus	Hyoglossus	Hyoglossus	Hyoglossus
Styloglossus	Styloglossus	Styloglossus	Styloglossus	Styloglossus	Styloglossus	Styloglossus	Styloglossus	Styloglossus
– (pres. other mammals)	–	– (pres. *Callithrix*)	Palatoglossus	Palatoglossus	?	Palatoglossus	Palatoglossus	Palatoglossus
'Rectus-cervicis'								
Sternohyoideus	Sternohyoideus	Sternohyoideus	Sternohyoideus	Sternohyoideus	Sternohyoideus	Sternohyoideus	Sternohyoideus	Sternohyoideus
Omohyoideus	Omohyoideus	? (pres. *Cal.*, *Pit.*, *Sai.*)	Omohyoideus	Omohyoideus	Omohyoideus	Omohyoideus	Omohyoideus	Omohyoideus
Sternothryroideus	Sternothryroideus	Sternothryroideus	Sternothryroideus	Sternothryroideus	Sternothryroideus	Sternothryroideus	Sternothryroideus	Sternothryroideus
Thyrohyoideus	Thyrohyoideus	Thyrohyoideus	Thyrohyoideus	Thyrohyoideus	Thyrohyoideus	Thyrohyoideus	Thyrohyoideus	Thyrohyoideus

'Geniohyoideus', 'Rectus cervicis', 'geniohyoideus' and 'rectus cervicus' groups sensu Edgeworth (1935); *Cal.*, *Pit.*, *Sai.*, *Callithrix*, *Pithecia* and *Saimiri*; pres., present in.

Table 6 Scheme illustrating the authors' hypotheses regarding the homologies of the pectoral and arm muscles of adults of representative primate taxa (see caption of Table 3).

Lemur (22 muscles: 17 pectoral; 5 arm)	*Tarsius* (22 muscles: 17 pectoral; 5 arm)	*Aotus* (21 muscles: 16 pectoral; 5 arm)	*Macaca* (22 muscles: 17 pectoral; 5 arm)	*Hylobates* (19 muscles: 14 pectoral; 5 arm)	*Pongo* (20 muscles: 15 pectoral; 5 arm)	*Gorilla* (19 muscles: 14 pectoral; 5 arm)	*Pan* (19 muscles: 14 pectoral; 5 arm)	*Homo* (18 muscles: 14 pectoral; 4 arm)
Axial: pec. girdle								
Serratus anterior	Serratus anterior	Serratus anterior	Serratus anterior	Serratus anterior	Serratus anterior	Serratus anterior	Serratus anterior	Serratus anterior
Rhomboideus	Rhomboideus	Rhomboideus	Rhomboideus major	Rhomboideus major	Rhomboideus major	Rhomboideus major	Rhomboideus	Rhomboideus major
–	–	– (pres. *Callithrix*)	Rhomboideus minor	–	–	–	–	Rhomboideus minor
Rhomboideus occipitalis	Rhomboideus occipitalis	Rhomboideus occipitalis	Rhomboideus occipitalis	–	Rhomboideus occipitalis	–	–	–
Levator scapulae	Levator scapulae	Levator scapulae	Levator scapulae	Levator scapulae	Levator scapulae	Levator scapulae	Levator scapulae	Levator scapulae
Levator claviculae	Levator claviculae	Levator claviculae	Levator claviculae	Levator claviculae	Levator claviculae	Levator claviculae	Levator claviculae	–
Subclavius	Subclavius	Subclavius	Subclavius	Subclavius	Subclavius	Subclavius	Subclavius	Subclavius
Appemdicular: pec. girdle and arm								
Pectoralis major	Pectoralis major	Pectoralis major	Pectoralis major	Pectoralis major	Pectoralis major	Pectoralis major	Pectoralis major	Pectoralis major
Pectoralis minor	Pectoralis minor	Pectoralis minor	Pectoralis minor	Pectoralis minor	Pectoralis minor	Pectoralis minor	Pectoralis minor	Pectoralis minor
Panniculus carn. (part)	Panniculus carn. (part)	Panniculus carn. (part)	Panniculus carn. (part)	–	–	–	–	–
Infraspinatus	Infraspinatus	Infraspinatus	Infraspinatus	Infraspinatus	Infraspinatus	Infraspinatus	Infraspinatus	Infraspinatus
Supraspinatus	Supraspinatus	Supraspinatus	Supraspinatus	Supraspinatus	Supraspinatus	Supraspinatus	Supraspinatus	Supraspinatus
Deltoideus scapularis	Deltoideus scapularis	Deltoideus	Deltoideus	Deltoideus	Deltoideus	Deltoideus	Deltoideus	Deltoideus
Deltoideus acro. et clav.	Deltoideus acro. et clav.	–	–	–	–	–	–	–
Teres minor	Teres minor	Teres minor	Teres minor	Teres minor	Teres minor	Teres minor	Teres minor	Teres minor
Subscapularis	Subscapularis	Subscapularis	Subscapularis	Subscapularis	Subscapularis	Subscapularis	Subscapularis	Subscapularis
Teres major	Teres major	Teres major	Teres major	Teres major	Teres major	Teres major	Teres major	Teres major
Latissimus dorsi	Latissimus dorsi	Latissimus dorsi	Latissimus dorsi	Latissimus dorsi	Latissimus dorsi	Latissimus dorsi	Latissimus dorsi	Latissimus dorsi
Triceps brachii	Triceps brachii	Triceps brachii	Triceps brachii	Triceps brachii	Triceps brachii	Triceps brachii	Triceps brachii	Triceps brachii
Dorsoepitrochlearis	Dorsoepitrochlearis	Dorsoepitrochlearis	Dorsoepitrochlearis	Dorsoepitrochlearis	Dorsoepitrochlearis	Dorsoepitrochlearis	Dorsoepitrochlearis	–
Brachialis	Brachialis	Brachialis	Brachialis	Brachialis	Brachialis	Brachialis	Brachialis	Brachialis
Biceps brachii	Biceps brachii	Biceps brachii	Biceps brachii	Biceps brachii	Biceps brachii	Biceps brachii	Biceps brachii	Biceps brachii
Coracobrachialis	Coracobrachialis	Coracobrachialis	Coracobrachialis	Coracobrachialis	Coracobrachialis	Coracobrachialis	Coracobrachialis	Coracobrachialis

pec., pectoral; acro. et. clav., acromialis et clavicularis; carn., carnosus; pres., present in.

Table 7 Scheme illustrating the authors' hypotheses regarding the homologies of the arm and hand muscles of adults of representative primate taxa (see caption of Table 3); the flexor brevis profundus 2 (which corresponds to the 'deep head of the flexor pollicis brevis' of human anatomy) is listed here (and counted) as a distinct muscle, following the works done on numerous other mammals.

Lemur (49 mus.: 19 forearm; 30 hand)	*Tarsius* (51–55 mus.: 19 forearm; 32–36 hand)	*Aotus* (41 mus.: 19 forearm; 22 hand)	*Macaca* (46 mus.: 19 forearm; 27 hand)	*Hylobates* (46 mus.: 19 forearm; 27 hand)	*Pongo* (38 mus.: 18 forearm; 20 hand)	*Gorilla* (38 mus.: 18 forearm; 20 hand)	*Pan* (45 mus.: 19 forearm; 26 hand)	*Homo* (41 mus.: 20 forearm; 21 hand)
Append.: ven. forearm								
Pronator quadratus	Pronator quadratus	Pronator quadratus	Pronator quadratus	Pronator quadratus	Pronator quadratus	Pronator quadratus	Pronator quadratus	Pronator quadratus
Flexor dig. profundus	Flexor dig. profundus	Flexor dig. profundus	Flexor dig. profundus	Flexor dig. profundus	Flexor dig. profundus	Flexor dig. profundus	Flexor dig. profundus	Flexor dig. profundus
–	–	–	–	Flexor pollicis longus	–	–	–	Flexor pollicis longus
Flexor dig. superficialis	Flexor dig. superficialis	Flexor dig. superficialis	Flexor dig. superficialis	Flexor dig. superficialis	Flexor dig. superficialis	Flexor dig. superficialis	Flexor dig. superficialis	Flexor dig. superficialis
Palmaris longus	Palmaris longus	Palmaris longus	Palmaris longus	Palmaris longus	Palmaris longus	Palmaris longus	Palmaris longus	Palmaris longus
Flexor carpi ulnaris	Flexor carpi ulnaris	Flexor carpi ulnaris	Flexor carpi ulnaris	Flexor carpi ulnaris	Flexor carpi ulnaris	Flexor carpi ulnaris	Flexor carpi ulnaris	Flexor carpi ulnaris
Epitrochleoanconeus	Epitrochleoanconeus	Epitrochleoanconeus	Epitrochleoanconeus	–	–	–	Epitrochleoanconeus	–
Flexor carpi radialis	Flexor carpi radialis	Flexor carpi radialis	Flexor carpi radialis	Flexor carpi radialis	Flexor carpi radialis	Flexor carpi radialis	Flexor carpi radialis	Flexor carpi radialis
Pronator teres	Pronator teres	Pronator teres	Pronator teres	Pronator teres	Pronator teres	Pronator teres	Pronator teres	Pronator teres
Append.: ven. and dorsal hand								
Palmaris brevis	Palmaris brevis	Palmaris brevis	Palmaris brevis	Palmaris brevis	Palmaris brevis	Palmaris brevis	Palmaris brevis	Palmaris brevis
Lumbricales 1–4	Lumbricales 1–4	Lumbricales 1–4	Lumbricales 1–4	Lumbricales 1–4	Lumbricales 1–4	Lumbricales 1–4	Lumbricales 1–4	Lumbricales 1–4
Contrahentes dig. (2 mus.)	Contrahentes dig. (8 mus.)	Contrahentes dig. (3 mus.)	Contrahentes dig. (3 mus.)	Contrahentes dig. (3 mus.)	–	–	Contrahentes dig. (2 mus.)	–

Apend., appendicular; ven., ventral; dig., digitorum; dor, dorsales, fbp., flexores breves profundi; mi., minimi; mus., muscles; pal., palmares; pre., present in; prof., profundus; ra., radialis; 'volaris primus of Henle' of human anatomy, thin, deep additional slip of adductor pollicis (or TDAS-AD) sensu the present work (which, following most atlases of human anatomy, is listed here – and counted – as a distinct muscle).

Table 7 *Continued.*

Lemur (49 mus.: 19 forearm; 30 hand)	*Tarsius* (51–55 mus.: 19 forearm; 32–36 hand)	*Aotus* (41 mus.: 19 forearm; 22 hand)	*Macaca* (46 mus.: 19 forearm; 27 hand)	*Hylobates* (46 mus.: 19 forearm; 27 hand)	*Pongo* (38 mus.: 18 forearm; 20 hand)	*Gorilla* (38 mus.: 18 forearm; 20 hand)	*Pan* (45 mus.: 19 forearm; 26 hand)	*Homo* (41 mus.: 20 forearm; 21 hand)
Adductor pollicis	Adductor pollicis	Adductor pollicis	Adductor pollicis	Adductor pollicis	Adductor pollicis	Adductor pollicis	Adductor pollicis	Adductor pollicis
–	–	–	–	–	–	–	–	'Volaris primus of Henle'
Flexor brevis prof. 2	Flexor brevis prof. 2	–	Flexor brevis prof. 2	Flexor brevis prof. 2	Flexor brevis prof. 2	Flexor brevis prof. 2	Flexor brevis prof. 2	Flexor brevis prof. 2
Fbp. 3–9 (7 mus.)	Fbp. 3–9 (7 mus.)	Interossei pal. 1–3 (fbp 4,7,9)	Fbp. 3–9 (7 mus.)	Interossei pal. 1–3 (fbp 4,7,9)	Interossei pal. 1–3 (fbp 4,7,9)	Interossei pal. 1–3 (fbp 4,7,9)	Fbp. 3–9 (7 mus.)	Interossei pal. 1-3 (fbp 4,7,9)
–	–	Interossei dor. 1-4	—	Interossei dor. 1-4	Interossei dor. 1-4	Interossei dor. 1-4	—	Interossei dor. 1–4
Flexor pollicis brevis	Flexor pollicis brevis	Flexor pollicis brevis	Flexor pollicis brevis	Flexor pollicis brevis	Flexor pollicis brevis	Flexor pollicis brevis	Flexor pollicis brevis	Flexor pollicis brevis
Opponens pollicis	Opponens pollicis	Opponens pollicis	Opponens pollicis	Opponens pollicis	Opponens pollicis	Opponens pollicis	Opponens pollicis	Opponens pollicis
Flexor digiti mi. brevis	Flexor digiti mi. brevis	Flexor digiti mi. brevis	Flexor digiti m brevis	Flexor digiti mi. brevis	Flexor digiti mi. brevis	Flexor digiti mi. brevis	Flexor digiti mi. brevis	Flexor digiti mi. brevis
Opponens digiti mi.	Opponens digiti mi.	Opponens digiti mi.	Opponens digiti mi.	Opponens digiti mi.	Opponens digiti mi.	Opponens digiti mi.	Opponens digiti mi.	Opponens digiti mi.
Abductor pollicis brevis	Abductor pollicis brevis	Abductor pollicis brevis	Abductor pollicis brevis	Abductor pollicis brevis	Abductor pollicis brevis	Abductor pollicis brevis	Abductor pollicis brevis	Abductor pollicis brevis
Abductor digiti mi.	Abductor digiti mi.	Abductor digiti mi.	Abductor digiti mi.	Abductor digiti mi.	Abductor digiti mi.	Abductor digiti mi.	Abductor digiti mi.	Abductor digiti mi.
Intermetacarpales 1–4	Intermetacarpales 1–4	–	Intermetacarpales 1–4	—	–	–	Intermetacarpales 1–4	–
Interossei access. (4 mus.)	?	–	–	Interossei access. (4 mus.)	–	–	–	–
Append.: dorsal forearm								
Extensor carpi ra. longus	Extensor carpi ra. longus	Extensor carpi ra. longus	Extensor carpi ra. longus	Extensor carpi ra. longus	Extensor carpi ra. longus	Extensor carpi ra. longus	Extensor carpi ra. longus	Extensor carpi ra. longus
Extensor carpi ra. brevis	Extensor carpi ra. brevis	Extensor carpi ra. brevis	Extensor carpi ra. brevis	Extensor carpi ra. brevis	Extensor carpi ra. brevis	Extensor carpi ra. brevis	Extensor carpi ra. brevis	Extensor carpi ra. brevis

Table 7 Continued.

Lemur (49 mus.: 19 forearm; 30 hand)	*Tarsius* (51–55 mus.: 19 forearm; 32–36 hand)	*Aotus* (41 mus.: 19 forearm; 22 hand)	*Macaca* (46 mus.: 19 forearm; 27 hand)	*Hylobates* (46 mus.: 19 forearm; 27 hand)	*Pongo* (38 mus.: 18 forearm; 20 hand)	*Gorilla* (38 mus.: 18 forearm; 20 hand)	*Pan* (45 mus.: 19 forearm; 26 hand)	*Homo* (41 mus.: 20 forearm; 21 hand)
Brachioradialis	Brachioradialis	Brachioradialis	Brachioradialis	Brachioradialis	Brachioradialis	Brachioradialis	Brachioradialis	Brachioradialis
Supinator	Supinator	Supinator	Supinator	Supinator	Supinator	Supinator	Supinator	Supinator
Extensor carpi ulnaris	Extensor carpi ulnaris	Extensor carpi ulnaris	Extensor carpi ulnaris	Extensor carpi ulnaris	Extensor carpi ulnaris	Extensor carpi ulnaris	Extensor carpi ulnaris	Extensor carpi ulnaris
Anconeus	Anconeus	Anconeus	Anconeus	–	Anconeus	Anconeus	Anconeus	Anconeus
Extensor digitorum	Extensor digitorum	Extensor digitorum	Extensor digitorum	Extensor digitorum	Extensor digitorum	Extensor digitorum	Extensor digitorum	Extensor digitorum
Extensor digiti mi.	Extensor digiti mi.	Extensor digiti mi.	Extensor digiti mi.	Extensor digiti mi.	Extensor digiti mi.	Extensor digiti mi.	Extensor digiti mi.	Extensor digiti mi.
Extensor indicis	Extensor indicis	Extensor indicis	Extensor indicis	Extensor indicis	Extensor indicis	Extensor indicis	Extensor indicis	Extensor indicis
Extensor pollicis longus	Extensor pollicis longus	Extensor pollicis longus	Extensor pollicis longus	Extensor pollicis longus	Extensor pollicis longus	Extensor pollicis longus	Extensor pollicis longus	Extensor pollicis longus
Abductor pollicis longus	Abductor pollicis longus	Abductor pollicis longus	Abductor pollicis longus	Abductor pollicis longus	Abductor pollicis longus	Abductor pollicis longus	Abductor pollicis longus	Abductor pollicis longus
–	–	–	–	Extensor pollicis brevis	–	–	–	Extensor pollicis brevis

more than 30 muscles, but modern humans usually have only 21 (Tables 7 and 8). The muscles that are conserved as separate structures in modern humans are those that insert onto the thumb; modern humans also have an additional pollical muscle 'volaris primus of Henle' (TDAS-AD *sensu* the present work; Tables 7 and 8). The muscles that modern humans have lost relative to phylogenetically plesiomorphic primates (e.g. contrahentes, intermetacarpales and interossei accessorii) attach to digits 2, 3, 4 and 5 (Tables 7 and 8).

The muscle groups that show the least variation in number within the primate clade (Table 8) are the mandibular muscles (range 7–8), the arm muscles (range 4–5), and the forearm muscles (range 18–20); then come the pectoral muscles (range 14–17), the branchial and hypobranchial muscles (range of 13–17 and of 11–15, respectively). The hyoid muscles (range 21–27) and in particular the hand muscles (range 20–36) show the greatest variation in number. With respect to the overall number of muscles in the primate subclades (Table 8), the New World monkeys are the least variable clade (range 117–121); this is remarkable because the Platyrrhini is the taxonomically most diverse group of extant primates (e.g. Groves, 2005). Then come the Old World monkeys (range 123–131), the hominoids (range 117–126), and the strepsirrhines (range 127–139). Interestingly, the phylogenetically more plesiomorphic groups of living primates (i.e. the strepsirrhines, range 127–139, and tarsiiforms, range 133–138), are the ones with the greatest number of muscles in total, followed by the Cercopithecinae (range 128–131) and *Hylobates* (129), then by *Pan* (126) and *Colobus* (range 123–126), then by modern humans (123), and lastly by *Gorilla* (range 119–120), *Pongo* (range 117–119) and the New World monkeys (range 117–121). There is no relationship between the absolute number of muscles and the number of accumulated steps (NS) shown in Fig. 2. For example, *Homo* and *Nycticebus* have an NS of 75 and 30, respectively, but the latter taxon clearly has many more muscles than the former. Details of the information summarized above are given in Appendix 1.

Conclusions

The present paper corroborates suggestions that muscle characters are useful for inferring phylogeny (e.g. Diogo, 2004a,b, 2007; Gibbs et al. 2000, 2002; see Introduction). The most parsimonious tree obtained from the cladistic analysis of 166 characters taken from the head, neck, pectoral and upper limb muscles (Fig. 2) is fully congruent with the most recent evolutionary molecular tree of Primates (Fig. 1). Regarding the evolution of these muscles within this order, there is no simple relationship between muscle number and relative position in the primate cladogram; modern humans have fewer head, neck, pectoral and upper limb muscles than most extant primates, including phylogenetically plesiomorphic primates such as strepsirrhines and tarsiiforms, as well as Old World monkeys and

Table 8 Table summarizing the total number of mandibular, hyoid (not including the small facial, extrinsic muscles of the ear), branchial, hypobranchial, pectoral, arm, forearm and hand muscles in adults of the primate genera included in our cladistic analyses. The nomenclature of the muscles follows that of Diogo & Abdala 2010.

	Lemur	*Propithecus*	*Loris*	*Nycticebus*	*Tarsius*	*Pithecia*	*Aotus*	*Saimiri*	*Callithrix*	*Colobus*	*Cercopithecus*	*Papio*	*Macaca*	*Hylobates*	*Pongo*	*Gorilla*	*Pan*	*Homo*
Mandibular muscles	8	8	8	8	8	8	8	8	8	7–8[1]	7–8[1]	8	8	8	7	8	8	8
Hyoid muscles (not extrinsic ear)	25	24[2]	24–26[3]	26[4]	24	22[5]	23	21[6]	22[7]	24–25[8]	26–27[9]	25–26[10]	26	26	26	26	26	27
Branchial muscles	14–16	14–16[11]	15–17[12]	14–17[13]	16–17	14–16[14]	14–16	15–16[15]	14–16[16]	13–14[17]	16[18]	14–15[19]	16	17	14–15	15–16	15	16
Hypobranchial muscles	12	12	12–15[20]	12–15[20]	12	12–13[21]	11–12	12[22]	13[23]	12[24]	12[24]	13	13	13	12–13	13	13	13
Pectoral muscles	17	15–16[25]	16[25]	16[25]	17	15[26]	16	16	17[27]	16[28]	17	17	17	14	15	14	14	14
Arm muscles	5	5	5	5	5	5	5	5	5	5	5	5	5	5	5	5	5	4
Forearm muscles	19	19	18[29]	18[29]	19	19	19	19	19	19	19	19	19	19	18	18	19	20
Hand muscles	30	30	30	34[30]	32–36	22	22	22	21[31]	27	27	27	27	27	20	20	26	21
Total number of muscles	130–132	127–130	128–135	133–139	133–138	117–120	118–121	118–119	119–121	123–126	129–131	128–130	131	129	117–119	119–120	126	123

Data from evidence provided by our own dissections and comparisons and by a review of the literature. When a strepsirrhine, platyrrhine and cercopithecid have a number of muscles that is different to the number of muscles present in *Lemur*, *Aotus* and *Macaca*, respectively (see Tables 2–7), this will be explained in the text provided below this Table 8.

[1]Only 7 mandibular muscles are surely present in *Colobus* and *Cercopithecus*, because there is no information about whether the tensor tympani is present or not in these taxa; if this muscle is present (as is the case in all other primates included in this Table), than these two taxa have eight mandibular muscles.

[2]Contrary to *Lemur*, in *Propithecus* the sphincter colli profundus is usually not present as a distinct muscle.

[3]Only 24 muscles are surely present in *Loris*, because there is no information about whether the jugulohyoideus and the depressor labii inferioris are present or not in this latter taxon; if these two muscles are present (as they are in, e.g. *Nycticebus*) than *Loris* has 26 hyoid muscles (not including the small facial intrisic muscles of the ear).

[4]Contrary to *Lemur*, in *Nycticebus* the depressor labii inferioris is usually present as a distinct muscle.

[5]Contrary to *Aotus*, in *Pithecia* the sphincter colli profundus is usually not present as a distinct muscle.

[6]Contrary to *Aotus*, in *Saimiri* the stylohyoideus is usually not present as a distinct muscle, and the frontalis and auriculo-orbitalis are not differentiated (there is an undivided orbito-temporo-auricularis instead).

[7]Contrary to *Aotus*, in *Callithrix* the stylohyoideus and depressor anguli oris are usually not present as distinct muscles, while the procerus is usually present as a distinct muscle.

[8]Contrary to *Macaca*, in *Colobus* the depressor labii inferioris is usually not present as a distinct muscle; only 24 muscles are surely present in *Colobus*, because there is no information about whether the stapedius is present or not in this latter taxon; if this muscle is present (as it is in, e.g. *Macaca*) than *Colobus* has 25 hyoid muscles (not including the small facial intrisic muscles of the ear).

[9]Contrary to *Macaca*, in *Cercopithecus* the sphincter colli profundus is usually present as a distinct muscle; only 26 muscles are surely present in *Cercopithecus*, because there is no information about whether the stapedius is present or not in this latter taxon; if this muscle is present (as it is in, e.g. *Macaca*) than *Cercopithecus* has 27 hyoid muscles (not including the small facial intrisic muscles of the ear).

[10]Only 25 muscles are surely present in *Papio*, because there is no information about whether the stapedius is present or not in this taxon; if this muscle is present (as it is in, e.g. *Macaca*) than *Papio* has 26 hyoid muscles (not including the small facial intrisic muscles of the ear).

[11]As in *Lemur*, only 14 muscles are surely present in *Propthecus*, because there is no information about whether the musculus uvulae and the salpingopharyngeus are present, or not, in this latter taxon; if these two muscles are present than *Propithecus* has branchial 16 muscles.

[12]Contrary to *Lemur*, in *Loris* the petropharyngeus is usually present as a distinct muscle; only 15 muscles are surely present in *Loris*, because there is no information about whether the musculus uvulae, salpingopharyngeus and ceratohyoideus are present or not in this latter taxon; if these three muscles are present (e.g. at least the ceratohyoideus is usually present in lemuriforms) than *Loris* has 17 branchial muscles.

[13]Only 14 muscles are surely present in *Nycticebus*, because there is no information about whether the musculus uvulae, salpingopharyngeus, ceratohyoideus and petropharyngeus are present or not in this latter taxon; if these four muscles are present (e.g. the petropharyngeus is usually present in *Loris*, and at least the ceratohyoideus is usually present in lemuriforms) than *Nycticebus* has 17 branchial muscles.

Table 8 *Continued.*

[14]As in *Aotus*, only 14 muscles are surely present in *Pithecia*, because there is no information about whether the musculus uvulae and the salpingopharyngeus are present, or not, in this latter taxon; if these two muscles are present than *Pithecia* has 16 branchial muscles.
[15]Contrary to *Aotus*, at least 15 muscles are surely present in *Saimiri*, because there is information indicating that the musculus uvulae is usually present as a distinct muscle in this latter taxon; however, there is no information about whether the salpingopharyngeus is present or not; if this muscle is present than *Saimiri* has 16 branchial muscles.
[16]As in *Aotus*, only 14 muscles are surely present in *Callithrix*, because there is no information about whether the musculus uvulae and the salpingopharyngeus are present, or not, in this latter taxon; if these two muscles are present than *Callithrix* has 16 branchial muscles.
[17]Contrary to *Macaca*, in *Colobus* the ceratohyoideus is usually not present as a distinct muscle; only 13 muscles are surely present in *Colobus*, because there is no information about whether the musculus uvulae is, or not, present in this taxon; if this muscle is present (as it is in, e.g. *Macaca*) than *Colobus* has 14 branchial muscles.
[18]Contrary to *Macaca*, in *Cercopithecus* the ceratocricoideus (a small muscle derived from the cricoarytenoideus posterior) is, seemingly, usually present as a distinct muscle.
[19]Only 14 muscles are surely present in *Papio*, because there is no information about whether the ceratohyoideus is, or not, present in this latter taxon; if this muscle is present (as it is in, e.g. *Macaca*) than *Papio* has 15 branchial muscles.
[20]Only those 12 muscles that are present in *Lemur* are surely present in *Loris* and *Nycticebus*, because our dissections did not allow us to discern if the genio-epiglotticus and hyo-epiglotticus (two small muscles derived from the genioglossus), as well as the palatoglossus, are usually present, or not, as distinct muscles in *Loris* and/or *Nycticebus* (e.g. these three muscles are present in various non-primate mammals); if these three muscle are present than there are 15 hypobranchial muscles in total.
[21]The information obtained by others and by us clearly idicates that the omohyoieus is usually present in *Pithecia* (*Aotus* was coded as '?'), but does not clarify if the palatoglossus is usually present (as in, e.g. *Callithrix*) or not (as in, e.g. *Aotus* and *Saimiri*) in *Pithecia*; if this latter muscle is present, *Pithecia* has 13 hypobranchial muscles.
[22]The information obtained by others and by us clearly idicates that the omohyoieus is usually present in *Samiri* (*Aotus* was coded as '?'; regarding the palatoglossus, it is seemingly usually absent, as is the case in *Aotus*).
[23]The information obtained by others and by us clearly idicates that the omohyoieus is usually present in *Callithrix* (*Aotus* was coded as '?') and that the palatoglossus is also usually present in this taxon (while it is usually missing in *Aotus*).
[24]Contrary to *Macaca*, in *Cercopithecus* and *Colobus* the omohyoideus is usually missing.
[25]Contrary to *Lemur*, in *Propithecus, Loris* and *Nycticebus* the deltoideus acromialis et claviclaris and the deltoideus scapularis are usually not present as distinct muscles; also, it is not clear if the rhomboideus occipitalis is usually present, or not, as a distinct muscle in *Propithecus*.
[26]Contrary to *Aotus*, in *Pithecia* the panniculus carnosus is usually missing.
[27]Contrary to *Aotus*, in *Callithrix* the rhomboideus major and rhomboideus minor are usually present as distinct muscles.
[28]Contrary to *Macaca*, in *Colobus* the rhomboideus major and rhomboideus minor are usually not present as distinct muscles.
[29]Contrary to *Lemur*, in *Nycticebus* and *Loris* the epitrochleoanconeus is usually not present as a distinct muscle.
[30]Contrary to *Lemur*, in *Nycticebus* the intercapitulares (4 muscles) are usually present as distinct muscles.
[31]Contrary to *Aotus*, in *Callithrix* the opponens pollicis is usually not present as a distinct muscle.

chimpanzees. It is remarkable that *Nycticebus* and *Tarsius*, two phylogenetically plesiomorphic genera that include some of the smallest living primates and that are often considered to be anatomically 'primitive' primates (e.g. Saban, 1968), have more head, neck, pectoral and upper limb muscles than any other primate taxon included in Table S8. These data clearly refute the contention that modern humans are the most anatomically complex primate (for recent discussions on this subject, see Burrows, 2008; Diogo et al. 2009b). The only muscle groups for which modern humans have more muscles than most other primates are the muscles of the face, larynx and forearm. In modern humans the latter include two peculiar muscles that are related to the movements of the thumb; among non-human primates extensor pollicis brevis and flexor pollicis longus are only present in hylobatids and, as explained above, modern humans usually have an additional muscle inserting onto the thumb, the 'volaris primus of Henle'. Therefore, this study shows that modern humans have fewer muscles than most other living primates, but the findings are also consistent with the proposal that facial and vocal communication and specialized thumb movements have probably played an important role in human evolution. In the future, we plan to analyze more specimens of the terminal taxa included in the present study, and also to expand our study to other primate taxa (e.g. representatives of the strepsirrhine families Daubentoniidae, Cheirogaleidae, Lepilemuridae and Galagidae, and of the platyrrhine family Atelidae). Additionally, we plan to extend our study to the lower limb muscles and, if possible, to other muscles of the body (i.e. extra-ocular, trunk, back, diaphragmatic, abdominal, perineal, coccygeal and/or anal muscles). This will allow us to compare the data that will be obtained in these future projects with the data published in this paper, and to discuss what are the broader evolutionary and phylogenetic implications of adding more specimens, taxa and characters to the cladistic analysis.

Acknowledgements

We especially acknowledge the important assistance of our co-author in other publications, Luke Matthews, who performed the Bayesian analyses and helped to develop the idea of using the 'fossilizable' characters. We would like to thank M. Carleton, D. Schmidt, R. Thorington and L. Gordon (Smithsonian Institution's National Museum of Natural History), R. Walsh and F. Slaby (Department of Anatomy, George Washington University), B. Richmond, R. Bernstein and S. McFarlin (Department of Anthropology, George Washington University), N. Rybczynski (Canadian Museum of Nature), H. Mays (Cincinnati Museum of Natural History), A. Aziz (Department of Anatomy, Howard University), F. Pastor (Department of Anatomy, University of Valladolid), A. Gorow, H. Fitch-Snyder and B. Rideout (San Diego Zoo) and J. Fritz and J. Murphy (Primate Foundation of Arizona) for kindly providing the non-primate and primate mammalian specimens dissected during this project. We would also like to thank Z. Peng, M. Chardon, A. Burrows, S. Dunlap, A. Aziz, J. Adams and V. Barriel for discussions and insightful comments. R.D. was supported by a George Washington University (GW) Presidential Merit Fellowship and B.W. by the GW University Professorship in Human Origins, the GW VPAA and the GW Selective Excellence Program.

References

Abramowitz I (1955) On the existence of a palmar interosseous muscle in the thumb with particular reference to the Bantu-speaking Negro. *S Afr J Sci* **51**, 270–276.

Aiello L, Dean C (1990) *An Introduction to Human Evolutionary Anatomy*. San Diego: Academic Press.

Aikawa M, Shimozawa A (1994) Anatomical observations on the musculi suprahyoidei and apparatus hyoideus with special reference to the musculus jugulohyoideus and os stylohyoideum of the mouse, hamster and rat. *Acta Anat* **150**, 294–306.

Akiyama K (1959) The nerves of the hand of the *Macacus cyclopsis*. *Okajimas Folia Anat Jpn* **34**, 641–655.

Allen H (1897) Observations on *Tarsius fuscus*. *Proc Acad Nat Sci Philad* **49**, 35–55.

Andrews P, Groves CP (1976) Gibbons and brachiation. In *Gibbon and Siamang*, **Vol. 4** (ed Rumbaugh DM), pp. 167–218. Basel: Karger.

Arnold C, Matthews LJ, Nunn CL (2010) The 10kTrees Website: A New Online Resource for Primate Phylogeny. *Evol Anthropol* **19**, 114–118.

Ashton EH, Oxnard CE (1963) The musculature of the primate shoulder. *Trans Zool Soc Lond* **29**, 553–650.

Avril C (1963) Kehlkopf und Kehlsack des Schimpansen (*Pan troglodytes*). *Gegenbaurs Morphol Jahrb* **105**, 74–129.

Aziz MA (1981) Possible ''atavistic'' structures in human aneuploids. *Am J Phys Anthropol* **54**, 347–53.

Aziz MA, Dunlap SS (1986) The human extensor digitorum profundus muscle with comments on the evolution of the primate hand. *Primates* **27**, 293–319.

Bakewell MA, Shi P, Zhang J (2007) More genes underwent positive selection in chimpanzee evolution than in human evolution. *Proc Natl Acad Sci U S A* **104**, 7489–7494.

Barnard WS (1875) Observations on the membral musculation of *Simia satyrus* (Orang) and the comparative myology of man and the apes. *Proc Amer Assoc Adv Sci* **24**, 112–144.

Barrow JR, Capecchi MR (1999) Compensatory defects associated with mutations in *Hoxa1* restore normal palatogenesis to *Hoxa2* mutants. *Development* **126**, 5011–5026.

Beattie J (1927) The anatomy of the common marmoset (*Hapale jacchus* Kuhl). *Proc Zool Soc Lond* **1927**, 593–718.

Beddard FE (1893) Contributions to the anatomy of the anthropoid apes. *Trans Zool Soc Lond* **13**, 177–218.

Bininda-Emonds OR, Cardillo M, Jones KE, et al. (2007) The delayed rise of present-day mammals. *Nature* **446**, 507–512.

Bischoff TLW (1870) Beitrage zur Anatomie des Hylobates leuciscus and zueiner vergleichenden Anatomie der Muskeln der Affen und des Menschen. *Abh Bayer Akad Wiss Miinchen Math Phys Kl* **10**, 197–297.

Bischoff TLW (1880) Beitrage zur Anatomie des *Gorilla*. *Abh Bayer Akad Wiss Miinchen Math Phys Kl* **13**, 1–48.

Boyer EL (1939) The cranio-mandibular musculature of the orang-utan, *Simia satyrus*. *Am J Phys Anthropol* **24**, 417–427.

Brandes G (1932) Über den Kehlkopf des Orang-Utans in verschiedenen Altersstadien mit besonderer Berücksichtigung der Kehlsackfrage. *Gegenbaurs Morphol Jahrb* **69**, 1–61.

Broca P (1869) L'ordre des primates – parallele anatomique de l'homme et des singes. *Bull Soc Anthropol Paris* **4**, 228–401.

Brooks HSJ (1886a) On the morphology of the intrinsic muscles of the little finger, with some observations on the ulnar head of the short flexor of the thumb. *J Anat Physiol* **20**, 644–661.

Brooks HSJ (1886b) Variations in the nerve supply of the flexor brevis pollicis muscle. *J Anat Physiol* **20**, 641–644.

Brooks HSJ (1887) On the short muscles of the pollex and hallux of the anthropoid apes, with special reference to the opponens hallucis. *J Anat Physiol* **22**, 78–95.

Bryant MD (1945) Phylogeny of Nearctic Sciuridae. *Am Midl Nat* **33**, 257–390.

Burmeister H (1846) *Beiträge zur näheren Kenntniss der Gattung Tarsius*. Berlin: Georg Reimer.

Burrows AM (2008) The facial expression musculature in primates and its evolutionary significance. *Bioessays* **30**, 212–225.

Burrows AM, Waller BM, Parr LA, et al. (2006) Muscles of facial expression in the chimpanzee (*Pan troglodytes*): descriptive, comparative and phylogenetic contexts. *J Anat* **208**, 153–167.

Burrows AM, Waller BM, Parr LA (2009) Facial musculature in the rhesus macaque (*Macaca mulatta*): evolutionary and functional contexts with comparisons to chimpanzees and humans. *J Anat* **215**, 320–334.

Cachel S (1984) Growth and allometry in primate masticatory muscles. *Arch Oral Biol* **29**, 287–293.

Campbell B (1937) The shoulder musculature of the platyrrhine monkeys. *J Mammal* **18**, 66–71.

Carlson KJ (2006) Muscle architecture of the common chimpanzee (*Pan troglodytes*): perspectives for investigating chimpanzee behavior. *Primates* **47**, 218–229.

Champneys F (1872) The muscles and nerves of a Chimpanzee (*Troglodytes Niger*) and a *Cynocephalus Anubis*. *J Anat Physiol* **6**, 176–211.

Chapman HC (1878) On the Structure of the *Gorilla*. *Proc Acad Nat Sci Philad* **30**, 385–394.

Chapman HC (1879) On the structure of the chimpanzee. *Proc Acad Nat Sci Philad* **31**, 52–63.

Chapman HC (1880) On the structure of the orang outang. *Proc Acad Nat Sci Philad* **32**, 160–175.

Chapman HC (1900) Observations upon the anatomy of *Hylobates leuciscus* and *Chiromys Madagascariensis*. *Proc Acad Nat Sci Philad* **52**, 414–423.

Chapman HC (1902) Observations upon *Galeopithecus volans*. *Proc Acad Nat Sci Philad* **54**, 241–254.

Chudzinski T (1885) Sur les muscles peaussiers du crane et de la face observes sur un jeune gorilla. *Bull Soc Anthropol Paris* **8**, 583–586.

Church WS (1861–1862) On the myology of the orang utang (*Simia morio*). *Natl Hist Rev* **1**, 510–516; 2, 82–94.

Chylewski W (1926) Glowa lokciowa m. nawrotnego oblego (m. pronator teres) w szerega naczelynych. *C R Soc Sci Varsowie, Cl 3*, **19**, 367–375.

Cihak R (1972) Ontogenesis of the skeleton and intrinsic muscles of the human hand and foot. *Adv Anat Embryol Cell Biol* **46**, 1–194.

Curry B, Alleandale MI, Kuz J, et al. (2000) A new variation of abductor digiti minimi accessorius. *J Hand Surg* **25**, 585–587.

Cuvier G, Laurillard L (1849) *Recueil de planches de myologie*. Paris: Anatomie comparée 3.

Day MH, Iliffe SR (1975) The contrahens muscle layer in *Tarsius*. *Folia Primatol* **24**, 241–249.

Day MH, Napier J (1961) The two heads of the flexor pollicis brevis. *J Anat* **95**, 123–130.

Day MH, Napier J (1963) The functional significance of the deep head of flexor pollicis brevis in primates. *Folia Primatol* **1**, 122–134.

Deniker J (1885) Recherches anatomiques et embryologiques sur les singes anthropoides, foetus de gorille et de gibbon. *Arch Zool Exp Gén* **3**, 1–265.

Deniker J, Boulart R (1885) Les sacs laryngiens, les excroissances adipeuses, les poumons, le cerveau, etc. des orang-utans. *Nouv Arch Mus Hist Nat, ser. 3*, **7**, 35–56.

Diogo R (2004a) *Morphological Evolution, Aptations, Homoplasies, Constraints, and Evolutionary Trends: Catfishes as a Case Study on General Phylogeny and Macroevolution*. Enfield: Science Publishers.

Diogo R (2004b) Muscles versus bones: catfishes as a case study for an analysis on the contribution of myological and osteological structures in phylogenetic reconstructions. *Anim Biol* **54**, 373–391.

Diogo R (2007) *On the Origin and Evolution of Higher-Clades: Osteology, Myology, Phylogeny and Macroevolution of Bony Fishes and the Rise of Tetrapods*. Enfield: Science Publishers.

Diogo R (2008) Comparative anatomy, homologies and evolution of the mandibular, hyoid and hypobranchial muscles of bony fish and tetrapods: a new insight. *Anim Biol* **58**, 123–172.

Diogo R (2009) The head musculature of the Philippine colugo (Dermoptera: *Cynocephalus volans*), with a comparison to tree-shrews, primates and other mammals. *J Morphol* **270**, 14–51.

Diogo R, Abdala V (2007) Comparative anatomy, homologies and evolution of the pectoral muscles of bony fish and tetrapods: a new insight. *J Morphol* **268**, 504–517.

Diogo R, Abdala V (2010) *Muscles of Vertebrates – Comparative Anatomy, Evolution, Homologies and Development*. Enfield: Science Publishers.

Diogo R, Chardon M (2000) Homologies between different adductor mandibulae sections of teleostean fishes, with a special regard to catfishes (Teleostei: Siluriformes). *J Morphol* **243**, 193–208.

Diogo R, Oliveira C, Chardon M (2001) On the osteology and myology of catfish pectoral girdle, with a reflection on catfish (Teleostei: Siluriformes) plesiomorphies. *J Morphol* **249**, 100–125.

Diogo R, Hinits Y, Hughes SM (2008a) Development of mandibular, hyoid and hypobranchial muscles in the zebrafish: homologies and evolution of these muscles within bony fishes and tetrapods. *BMC Dev Biol* **8**, 24–46.

Diogo R, Abdala V, Lonergan N, et al. (2008b) From fish to modern humans – comparative anatomy, homologies and evolution of the head and neck musculature. *J Anat* **213**, 391–424.

Diogo R, Abdala V, Aziz MA, et al. (2009a) From fish to modern humans – comparative anatomy, homologies and evolution of the pectoral and forelimb musculature. *J Anat* **214**, 694–716.

Diogo R, Wood BA, Aziz MA, et al. (2009b) On the origin, homologies and evolution of primate facial muscles, with a particular focus on hominoids and a suggested unifying nomenclature for the facial muscles of the Mammalia. *J Anat* **215**, 300–319.

Dobson GE (1881) Notes on the muscular anatomy of *Cercopithecus callitrichus*. *Proc Zool Soc Lond* **1881**, 812–818.

Donisch E (1973) A comparative study of the back muscles of gibbon and man. In *Gibbon and Siamang*, **Vol. 2** (ed Rumbaugh DM), pp. 99–120. Basel: Karger.

DuBrul EL (1958) *Evolution of the Speech Apparatus*. Springfield: Thomas.

Duckworth WLH (1898) Note on a foetus of *Gorilla* savagei. *J Anat Physiol* **33**, 82–90.

Duckworth WLH (1904) *Studies from the Anthropological Laboratory, the Anatomy School*. Cambridge, London: C. J. Clay & Sons.

Duckworth WLH (1912) On some points in the anatomy of the plica cocalis. *J Anat Physiol* **47**, 80–115.

Duckworth WLH (1915) *Morphology and Anthropology*, 2nd edn. Cambridge: Cambridge University Press.

Dunlap SS, Thorington RW, Aziz MA (1985) Forelimb anatomy of New World monkeys: myology and the interpretation of primitive anthropoid models. *Am J Phys Anthropol* **68**, 499–517.

Duvernoy M (1855–1856) Des caracteres anatomiques de grands singes pseudoanthropomorphes. *Arch Mus Natl Hist Nat Paris* **8**, 1–248.

Dwight T (1895) Notes on the dissection and brain of the chimpanzee 'Gumbo'. *Mem Boston Soc Nat Hist* **5**, 31–51.

Dylevsky I (1967) Contribution to the ontogenesis of the flexor digitorum superficialis and the flexor digitorum profundus in man. *Folia Morphol (Praha)* **15**, 330–335.

Edgeworth FH (1935) *The Cranial Muscles of Vertebrates*. Cambridge: Cambridge University Press.

Ehlers E (1881) Beiträge zur Kenntnis des gorilla und chimpanse. *Abh d K Gesell d Wissensch du Göttingen, Phys Cl* **38**, 3–77.

Eisler P (1890) *Das Gefäss- und periphere Nervensystem des Gorilla*. Talle: Tausch and Grosse.

Fabre P-H, Rodrigues A, Douzery EJP (2009) Patterns of macroevolution among Primates inferred from a supermatrix of mitochondrial and nuclear DNA. *Mol Phyl Evol* **53**, 808–825.

Falk D (1993) Meningeal arterial patterns in great apes: implications for hominid vascular evolution. *Am J Phys Anthropol* **92**, 81–97.

Falk D, Nicholls P (1992) Meningeal arteries in Rhesus macaques (*Macaca mulatta*): implications for vascular evolution in anthropoids. *Am J Phys Anthropol* **89**, 299–308.

Fick R (1895a) Vergleichend-anatomische Studien an einem erwachsenen Orang-utang. *Arch Anat Physiol Anat Abt* **1895**, 1–100.

Fick R (1895b) Beobachtungen an einem zweiten envachsenen Orang-Utang und einem Schimpansen. *Arch Anat Physiol Anat Abt* **1895**, 289–318.

Fick R (1925) Beobachtungen an den muskeln einger schimpansen. *Zeitschr Anat und Entwick* **76**, 117–141.

Fiedler W (1953) Die Kaumuskulatur der Insectivora. *Acta Anat* **18**, 101–175.

Fitzwilliams DCL (1910) The short muscles of the hand of the agile gibbon (*Hylobatis agilis*), with comments on the morphological position and function of the short muscles of the hand of man. *Proc R Soc Edinb* **30**, 201–218.

Forster A (1917) Die mm. contrahentes und interossei manus in der Säugetierreihe und beim Menschen. *Arch Anat Physiol Anat Abt* **1916**, 101–378.

Forster A (1933) Contribution à l'evolution du pouce chez *Hylobates leuciscus*. *Arch Anat Histol Embryol* **16**, 215–230.

Fürbringer M (1875) *Beitrag zur Kenntnis der Kehlkopfmuskulatur*. Jena: Verlag von Hermann.

Gasser RF (1967) The development of the facial muscles in man. *Am J Anat* **120**, 357–376.

Geist FD (1933) Nasal cavity, larynx, mouth and pharynx. In *The Anatomy of the Rhesus Monkey* (eds Hartman CG, Straus WL), pp. 189–209. Baltimore: Williams & Wilkins.

George RM (1977) The limb musculature of the Tupaiidae. *Primates*, **8**, 1–34.

Gibbs S (1999) Comparative soft tissue morphology of the extant Hominoidea, including Man. Unpublished PhD Thesis, Liverpool: The University of Liverpool.

Gibbs S, Collard M, Wood BA (2000) Soft-tissue characters in higher primate phylogenetics. *Proc Natl Acad Sci USA* **97**, 11130–11132.

Gibbs S, Collard M, Wood BA (2002) Soft-tissue anatomy of the extant hominoids: a review and phylogenetic analysis. *J Anat* **200**, 3–49.

Glidden EM, De Garis CF (1936) Arteries of the chimpanzee (*Pan* spec?), I, the aortic arch, II, arteries of the upper extremety, III, the descending aorta, IV, arteries of the lower extremety. *Am J Anat* **58**, 501–527.

Göllner K (1982) Untersuchungen über die vom N. trigeminus innervierte Kiefermusculatur des Schimpansen (*Pan troglodytes*, Blumenbach 1799) und des Gorilla (*Gorilla gorilla gorilla*, Savage and Wyman 1847). *Gegenbaurs Morphol Jahrb* **128**, 851–903.

Goodman M (1999) The natural history of the primates. *Am J Hum Genet* **64**, 31–39.

Grand T (1968) Functional anatomy of the upper limb. In *Biology of the Howler Monkey (Alouatta caraya), Biblioteca Primatologica number 7* (ed. Malinow MR), pp. 104–125. Kargel: Basel.

Gratiolet LP, Alix PHE (1866) Recherches sur l'anatomie du *Troglodytes aubryi*. *Nouv Arch Mus Hist Nat Paris* **2**, 1–264.

Greene EC (1935) *Anatomy of the Rat*. New York: Hafner Publishing Co.

Grönroos H (1903) Die musculi biceps brachii und latissimocondyloideus bei der affengattung *Hylobates* im vergleich mit den ensprechenden gebilden der anthropoiden und des menschen. *Abh Kön Preuss Akad Wiss Berlin* **1903**, 1–102.

Groves CP (1986) Systematics of the great apes. In *Comparative Primate Biology: Systematics, Evolution and Anatomy*, **Vol. 1** (eds Swindler DR, Erwin J), pp. 187–217. New York: A.R. Liss.

Groves CP (1995) Revised character descriptions for Hominoidea. Typescript, 9 pp.

Groves CP (2001) *Primate Taxonomy*. Washington, DC: Smithsonian Institution Press.

Groves CP (2005) Order Primates, Order Monotremata, (and select other orders). In *Mammal Species of the World*, 3rd edn (ed. Wilson DE, Reeder DM), pp. 178–181. Baltimore: Johns Hopkins University Press.

Gunnell GF, Simmons NB (2005) Fossil evidence and the origin of bats. *J Mammal Evol* **12**, 209–246.

Gusmão LCB, Feijó MJF, Sousa-Rodrigues CFS (2005) Morphological aspects of abductor digiti minimi muscle in the hand. *Int J Morphol* **23**, 373–376.

Hadano A (1955) On the muscles of the upper arm of *Macacus cyclopsis*. *Okajimas Folia Anat Jpn* **29**, 53–65.

Haines RW (1955) The anatomy of the hand of certain insectivores. *Proc Zool Soc Lond* **125**, 761–777.

Harrison DFN (1995) *The Anatomy and Physiology of the Mammalian Larynx*. Cambridge: University Press.

Hartmann R (1886) *Anthropoid apes*. London: Keegan.

Hasegawa M, Kishino H, Hayasaka K, et al. (1990) Mitochondrial DNA evolution in primates: transition rate has been extremely low in lemur. *J Mol Evol* **31**, 113–121.

Haughton S (1864) Notes on animal mechanics, 2, on the muscles of some of the smaller monkeys of the genera *Cercopithecus* and *Macaca*. *Proc R Irish Acad* **8**, 467–471.

Haughton S (1865) Notes on animal mechanics, 7, on the muscular anatomy of the *Macacus nemestrinus*. *Proc R Irish Acad* **9**, 277–287.

Henkel-Kopleck A, Schmidt HM (2000) Das Ligamentum metacarpale pollicis. *Handchir Mikrochir Plast Chir* **32**, 1–8.

Hepburn D (1892) The comparative anatomy of the muscles and nerves of the superior and inferior extremities of the anthropoid apes: I – Myology of the superior extremity. *J Anat Physiol* **26**, 149–186.

Hill WCO (1953) *Primates – Comparative Anatomy and Taxonomy, I, Strepsirhini*. Edinburgh: University Press.

Hill WCO (1955) *Primates – Comparative Anatomy and Taxonomy, II, Haplorhini: Tarsioidea*. Edinburgh: University Press.

Hill WCO (1957) *Primates – Comparative Anatomy and Taxonomy, III, Pithecoidea, Platyrrhini (families Hapalidae and Callimiconidae)*. Edinburgh: University Press.

Hill WCO (1959) The anatomy of *Callimico goeldii* (Thomas): a primitive American primate. *Trans Am Phil Soc New Ser* **49**, 1–116.

Hill WCO (1960) *Primates – Comparative Anatomy and Taxonomy, IV, Cebidae, Part A*. Edinburgh: University Press.

Hill WCO (1962) *Primates – Comparative Anatomy and Taxonomy, V, Cebidae, Part B*. Edinburgh: University Press.

Hill WCO (1966) *Primates – Comparative Anatomy and Taxonomy, VI, Catarrhini: Cercopithecoidea, Cercopithecinae*. New York: Interscience Publishers Inc.

Hill WCO (1970) *Primates – Comparative Anatomy and Taxonomy, VIII, Cynopithecinae: Papio, Mandrillus, Theropithecus*. Edinburgh: University Press.

Hill WCO (1974) *Primates – Comparative Anatomy and Taxonomy, VII, Cynopithecinae: Cercocebus, Macaca, Cynopithecus*. Edinburgh: University Press.

Hilloowala RA (1975) Comparative anatomical study of the hyoid apparatus in selected primates. *Am J Anat* **142**, 367–384.

Hilloowala RA (1980) The migrating omohyoid muscle – its significance? *J Human Evol* **9**, 165–172.

Himmelreich HA (1977) M. cephalopharyngeus der Säugetiere. *Gegenbaurs Morphol Jahrb* **123**, 556–588.

Hofër W. (1892) Vergleichend-anatomische Studien uber die Nerven des Armes und der Hand bei den Affen und dem Menschen. *Munchener Med Abhandl* **30**, 1–106.

Hosokawa H, Kamiya T (1961–1962) Anatomical sketches of visceral organs of the mountain gorilla (*Gorilla gorilla beringei*). *Primates* **3**, 1–28.

House EL (1953) A myology of the pharyngeal region of the albino rat. *Anat Rec* **116**, 363–381.

Howell AB (1936a) Phylogeny of the distal musculature of the pectoral appendage. *J Morphol* **60**, 287–315.

Howell AB (1936b) The phylogenetic arrangement of the muscular system. *Anat Rec* **66**, 295–316.

Howell AB, Straus WL (1932) The brachial flexor muscles in primates. *Proc US Natl Mus* **80**, 1–31.

Howell AB, Straus WL (1933) The muscular system. In *The Anatomy of the Rhesus Monkey* (eds Hartman CG, Straus WL), pp. 89–175. Baltimore: Williams and Wilkins Co.

Huber E (1930a) Evolution of facial musculature and cutaneous field of trigeminus – Part I. *Q Rev Biol* **5**, 133–188.

Huber E (1930b) Evolution of facial musculature and cutaneous field of trigeminus – Part II. *Q Rev Biol* **5**, 389–437.

Huber E (1931) *Evolution of Facial Musculature and Expression*. Baltimore: The Johns Hopkins University Press.

Huber E (1933) The facial musculature and its innervation. In *The Anatomy of the Rhesus Monkey* (eds Hartman CG, Straus WL), pp. 176–188. Baltimore: Williams & Wilkins.

Huelsenbeck JP, Ronquist F (2001) MrBayes: Bayesian inference of phylogeny. *Bioinformatics* **17**, 754–755.

Humphry G (1867) On some points in the anatomy of the chimpanzee. *J Anat Physiol* **1**, 254–268.

Huntington GS (1897) Contribution to the myology of *Lemur bruneus*. *Trans NY Acad Sci* **16**, 335–363.

Huntington GS (1903) Present problems of myological research and the significance and classification of muscular variations. *Am J Anat* **2**, 157–175.

Huxley TH (1864) The structure and classification of the Mammalia. *Med Times Gazette* **1864**, 398–468.

Huxley TH (1871) *The Anatomy of Vertebrated Animals*. London: J. & A. Churchill.

Immel MS (1997) Phylogenetic systematics of the primate genus Aotus based on hyoid morphology. Unpublished Honors Thesis, Bloomington: Illinois Wesleyan University.

Jacobi U (1966) Die Muskulatur des Unterarmes and der Hand bei *Macaca mulatta*. *Zeit Morph Anthrop* **58**, 48–73.

Janecka JE, Miller W, Pringle TH, et al. (2007) Molecular and genomic data identify the closest living relative of Primates. *Science* **318**, 792–794.

Jordan J (1971a) Studies on the structure of the organ of voice and vocalization in the chimpanzee, Part 1. *Folia Morphol* **30**, 99–117.

Jordan J (1971b) Studies on the structure of the organ of voice and vocalization in the chimpanzee, Part 2. *Folia Morphol* **30**, 222–248.

Jordan J (1971c) Studies on the structure of the organ of voice and vocalization in the chimpanzee, Part 3. *Folia Morphol* **30**, 323–340.

Jouffroy FK (1960a) Le squelette des membres et ses rapports musculaires dans le genre *Lemur* L. I. L'humérus. *Bull Mus nat Hist Nat, Ser 2*, **32**, 259–268.

Jouffroy FK (1960b) Remarques sur la terminologie des muscles releveurs de l'omoplate chez les prosimiens. *Bull Mus nat Hist Nat, Ser 2*, **32**, 371–375.

Jouffroy FK (1962) La musculature des membres chez les lémuriens de Madagascar – étude descriptive et comparative. *Mammalia* **26**, 1–326.

Jouffroy FK (1971) Musculature des membres. In *Traité de Zoologie, XVI: 3 (Mammifères)* (ed. Grassé PP), pp. 1–475. Paris: Masson et Cie.

Jouffroy FK (1975) Osteology and myology of the lemuriform postcranial skeleton. In *Lemur Biology* (eds Trattersall I, Sussman RW), pp. 149–192. New York: Plenum Press.

Jouffroy FK, Lessertisseur J (1957) Particularités musculaires de l'avant-bras et de la main chez un chimpanzé, Pan troglodytes (Owen). *Bull Mus Nat Hist Nat, Ser 2*, **29**, 121–126.

Jouffroy FK, Lessertisseur J (1958) Notes sur la musculature de la main et du pied d'un orang-outan *(Pongo pygmaeus Hoppius)*. *Bull Mus nat Hist Nat, Ser 2*, **30**, 111–122.

Jouffroy FK, Lessertisseur J (1959) Reflexions sur les muscles contracteurs des doigts et des orteils (contrahentes digitorum) chez les primates. *Ann Sci Nat Zool, Ser 12*, **1**, 211–235.

Jouffroy FK, Lessertisseur J (1960) Les spécialisations anatomiques de la main chez les singes à progression suspendue. *Mammalia* **24**, 93–151.

Jouffroy FK, Lessertisseur J (1971) Particularités musculaires des Monotrémes – musculature post-craniénne. In *Traité de Zoologie, XVI: 3 (Mammifères)* (ed. Grassé PP), pp. 679–836. Paris: Masson et Cie.

Jouffroy FK, Saban R (1971) Musculature peaucière. In *Traité de Zoologie, XVI: 3 (Mammifères)* (ed. Grassé PP), pp. 477–611. Paris: Masson et Cie.

Jungers WL, Stern JT (1980) Telemetered electromyography of forelimb muscle chains in gibbons (*Hylobates lar*). *Science* **208**, 617–619.

Jungers WL, Stern JT (1981) Preliminary electromtographical analysis of brachiation in gibbon and spider monkey. *Int J Primatol* **2**, 19–33.

Kajiyama H (1970) The superficial dorsal muscle group in Formosan monkey, II, second layer of the superficial muscle group (mm. atlantoscapulares anterior et posterior and m. rhomboideus). *Okajimas Folia Anat Jpn* **47**, 101–120.

Kallner M (1956) Die muskulatur und die funktion des schultergurtels und der vorderextremitat des orang-utans. *Morphol Jahrb* **97**, 554–665.

Kanagasuntheram R (1952–1954) Observations on the anatomy of the hoolock gibbon. *Ceylon J Sci Sect G* **5**, 11–64, 69–122.

Kanaya K, Wada T, Isogai S, et al. (2002) Variation in insertion of the abductor digiti minimi: an anatomic study. *J Hand Surg* **27**, 325–328.

Kaneff A (1979) Évolution morphologique des musculi extensores digitorum et abductor pollicis longus chez l'Homme. I. Introduction, méthodologie, M. extensor digitorum. *Gegenbaurs Morphol Jahrb* **125**, 818–873.

Kaneff A (1980a) Évolution morphologique des musculi extensores digitorum et abductor pollicis longus chez l'Homme. II. Évolution morphologique des m. extensor digiti minimi, abductor pollicis longus, extensor pollicis brevis et extensor pollicis longus chez l'homme. *Gegenbaurs Morphol Jahrb* **126**, 594–630.

Kaneff A (1980b) Évolution morphologique des musculi extensores digitorum et abductor pollicis longus chez l'Homme. III. Évolution morphologique du m. extensor indicis chez l'homme, conclusion générale sur l 'évolution morphologique des musculi extensores digitorum et abductor pollicis longus chez l'homme. *Gegenbaurs Morphol Jahrb* **126**, 774–815.

Kaneff A, Cihak R (1970) Modifications in the musculus extensor digitorum lateralis in phylogenesis and in human ontogenesis. *Acta Anat Basel* **77**, 583–604.

Kardong KV (2002) *Vertebrates: Comparative Anatomy, Function, Evolution*, 3rd edn. New York: McGraw-Hill.

Kass RE, Raftery AE (1995) Bayes Factors. *J Am Stat Assoc* **90**, 773–795.

Keith A (1894a) The myology of the Catarrhini: a study in evolution. Unpublished PhD thesis, Aberdeen: University of Aberdeen.

Keith A (1894b) Notes on a theory to account for the various arrangements of the flexor profundus digitorum in the hand and foot of primates. *J Anat Physiol* **28**, 335–339.

Keith A (1899) On the chimpanzees and their relationship to the gorilla. *Proc Zool Soc Lond* **1899**, 296–312.

Kelemen G (1948) The anatomical basis of phonation in the chimpanzee. *J Morphol* **82**, 229–256.

Kelemen G (1969) Anatomy of the larynx and the anatomical basis of vocal performance. In *The Chimpanzee – Vol 1 – Anatomy, Behaviour and Diseases of Chimpanzees* (ed. Bourne GH), pp. 35–186. Basel: Karger.

Kemp TS (2005) *The Origin and Evolution of Mammals*. New York: Oxford University Press.

Kikuchi Y (2010a) Comparative analysis of muscle architecture in primate arm and forearm. *Anat Histol Embryol* **39**, 93–106.

Kikuchi Y (2010b) Quantitative analysis of variation in muscle internal parameters in crab-eating macaques (*Macaca fascicularis*). *Anthropol Sci* **118**, 9–21.

Kikuya Y (1973) The M. temporalis of the Formosan monkey. *Okajimas Folia Anat Jpn* **49**, 455–469.

Kimura K, Tazai S (1970) On the musculature of the forelimb of the crab-eating monkey. *Primates* **11**, 145–170.

Kladetsky J, Kobold H (1966) Das teres-minor problem, der nervus auxilliaris und die Hautrumpftmuskulatur bei *Tupaia glis* (Diard 1820). *Anat Anz* **119**, 1–29.

Kleinschmidt A (1938) Die Schlund-und Kehlorgane des Gorillas ''Bobby'' unter besonderer – Berücksichtigung der gleichen Organe von Mensch und Orang – Ein Beitrag zur vergleichenden Anatomie des kehlkopfes. *Morphol Jahrb* **81**, 78–157.

Kleinschmidt A (1950) Zur anatomie des kehlkopfs der Anthropoiden. *Anat Anz* **97**, 367–372.

Kohlbrügge JHF (1890–1892)) Versuch einer Anatomie des Genus *Hylobates*. In *Zoologische Ergebnisse Einer Reise in Niederländisch Ost-Indien* (ed. Weber M), pp. 211–354. (Vol. 1), 138–208 (Vol. 2). Leiden: Verlag von EJ Brill.

Kohlbrügge JHF (1896) Der larynx und die stimmbildung der Quadrumana. *Natuurk T Ned Ind* **55**, 157–175.

Kohlbrügge JHF (1897) Muskeln und Periphere Nerven der Primaten, mit besonderer Berücksichtigung ihrer Anomalien. *Verh K Akad Wet Amst Sect 2* **5**, 1–246.

Kollmann M, Papin L (1914) Etudes sur les Lemuriens I – Le Larynx et le Pharynx. Anatomie comparee et Anatomie microscopique. *Ann Sci Nat, Ser 9*, **19**, 227–317.

Körner O (1884) Beiträge zur vergleichenden Anatomie und Physiologie des Kehlkopfes der Säugethiere und des Menschen. *Abh Senckenb Naturforsch Ges* **13**, 147–261.

Lampert H (1926) Zur Kenntnis des Platyrrhinenkehlkopfes. *Gegenbaurs Morphol Jahrb* **55**, 607–654.

Lander KF (1918) The pectoralis minor: a morphological study. *J Anat* **52**, 292–318.

Landsmeer JM (1986) A comparison of fingers and hand in *Varanus*, opossum and primates. *Acta Morphol Neerl Scand* **24**, 193–221.

Langer C (1879) Die Muskeln der Extremitäten des Orang als Grundlage einer vergleichend – myologischen Untersuchung. *Sitzugsber Math Nat Cl Kais Akad Wiss Wien* **79**, 177–222.

Le Gros Clark WE (1924) The myology of the tree-shrew (*Tupaia minor*). *Proc Zool Soc Lond* **1924**, 461–497.

Le Gros Clark WE (1926) On the anatomy of the pen-tailed tree-shrew (*Ptilocercus lowii*). *Proc Zool Soc Lond* **1926**, 1178–1309.

Leche W (1886) Über die Säugethiergattung *Galeopithecus*: eine morphologische untersuchung. *Kungl Svenska Vetenskap Akad Stockholm* **21**, 3–92.

Lewis OJ (1965) The evolution of the Mm. interossei in the primate hand. *Anat Rec* **153**, 275–287.

Lewis OJ (1989) *Functional Morphology of the Evolving Hand and Foot*. Oxford: Clarendon Press.

Lewis PO (2001) A likelihood approach to estimating phylogeny from discrete morphological character data. *Syst Biol* **50**, 913–925.

Lightoller GHS (1925) Facial muscles – the modiolus and muscles surrounding the rima oris with some remarks about the panniculus adiposus. *J Anat Physiol* **60**, 1–85.

Lightoller GS (1928a) The facial muscles of three orang utans and two cercopithecidae. *J Anat* **63**, 19–81.

Lightoller GS (1928b) The action of the m. mentalis in the expression of the emotion of distress. *J Anat* **62**, 319–332.

Lightoller GS (1934) The facial musculature of some lesser primates and a *Tupaia*. *Proc Zool Soc Lond* **1934**, 259–309.

Lightoller GS (1939) V. Probable homologues. A study of the comparative anatomy of the mandibular and hyoid arches and their musculature — Part I. Comparative myology. *Trans Zool Soc Lond* **24**, 349–382.

Lightoller GS (1940a) The comparative morphology of the platysma: a comparative study of the sphincter colli profundus and the trachelo-platysma. *J Anat* **74**, 390–396.

Lightoller GS (1940b) The comparative morphology of the m. caninus. *J Anat* **74**, 397–402.

Lightoller GS (1942) Matrices of the facialis musculature: homologization of the musculature in monotremes with that of marsupials and placentals. *J Anat* **76**, 258–269.

Lorenz R (1974) On the thumb of the Hylobatidae. In *Gibbon and Siamang*, **Vol. 3** (ed. Rumbaugh DM), pp. 157–175. Basel: Karger.

Loth E (1931) *Anthropologie des parties molles (muscles, intestins, vaisseaux, nerfs peripheriques)*. Paris: Mianowski-Masson et Cie.

Macalister A (1871) On some points in the myology of the chimpanzee and others of the primates. *Ann Mag Nat Hist* **7**, 341–351.

Macalister A (1872) The myology of the Cheiroptera. *Phil Trans R Soc Lond* **162**, 125–171.

Macalister A (1873) The muscular anatomy of the gorilla. *Proc Roy Irish Acad Sci 2* **1**, 501–506.

MacDowell EC (1910) Notes on the myology of *Anthropopithecus niger* and *Papio-thoth ibeanus*. *Am J Anat* **10**, 431–460.

Maddison WP, Maddison DR (2010) Mesquite: a modular system for evolutionary analysis. Version 2.73 http://mesquite project.org.

Maier W (2008) Epitensoric position of the chorda tympani in Anthropoidea: a new synapomorphic character, with remarks on the fissura glaseri in Primates. In *Mammalian Evolutionary Morphology: a Tribute to Frederick S. Szalay* (eds Sargis EJ, Dagosto M), pp. 339–352. Dordrecht: Springer.

Marivaux L, Bocat L, Chaimanee Y, et al. (2006) Cynocephalid dermopterans from the Palaeogene of South Asia (Thailand, Myanmar and Pakistan): systematic, evolutionary and palaeobiogeographic implications. *Zool Scripta* **35**, 395–420.

Matsuo T (1959) Muscles of the anterior chest of *Macacus cyclopsis*. *Okajimas Folia Anat Jpn* **34**, 571–585.

McMurrich JP (1903a) The phylogeny of the forearm flexors. *Am J Anat* **2**, 177–209.

McMurrich JP (1903b) The phylogeny of the palmar musculature. *Am J Anat* **2**, 463–500.

Meckel JF (1820–1838) *A system of Comparative Anatomy*. Paris: Sanson.

Menke PR, Henke W (2008) The hyo-laryngeal complex of *Tarsius bancanus* (Mammalia, Primates): a developmental and phylogenetic aspect. *Anthrop Anz* **66**, 257–272.

Michaëlis P (1903) Beitrage zur vergleichenden Myologie des *Cynocephalus babuin*, *Simia satyrus*, *Troglodytes niger*. *Arch Anat Physiol Anat Abt* **1**, 205–256.

Michilsens F, Vereecke EE, D'Août K, et al. (2009) Functional anatomy of the gibbon forelimb: adaptations to a brachiating lifestyle. *J Anat* **215**, 335–354.

Miller RA (1932) Evolution of the pectoral girdle and forelimb in the primates. *Am J Phys Anthropol* **17**, 1–56.

Miller RA (1943) Functional and morphological adaptations in the forelimbs of the slow lemurs. *Am J Anat* **73**, 153–183.

Miller RA (1952) The musculature of *Pan paniscus*. *Am J Anat* **91**, 182–232.

Milne-Edwards A, Grandidier A (1875) *Histoire physique, naturelle et politique de Madagascar, 6 & 9, Histoire naturelle des mammifères*. Paris: Hachette.

Mivart SG, Murie J (1865) Observations on the anatomy of *Nycticebus tardigradus*. *Proc Zool Soc Lond* **1865**, 240–256.

Murata K, Tamai M, Gupta A (2004) Anatomic study of variations of hypothenar muscles and arborization patterns of the ulnar nerve in the hand. *J Hand Surg* **29**, 500–509.

Murie J, Mivart SG (1872) On the anatomy of the Lemuroidea. *Trans Zool Soc Lond* **7**, 1–113.

Mustafa MA (2006) Neuroanatomy. 10th National Congress of Anatomy Bordum, Turkey, September 5, 6–10.

Nagashima S (1976) On the extensor muscles of the forearm in Formosan monkey (*Macaca cyclopis*). *Acta med Nagasaki* **20**, 29–71.

Nagashima S, Kang W-B, Hsiau C-H (1975) The M. pterygoideus externus and M. pterygoideus internus in Formosan Monkey. *Acta Med Nagasaki* **19**, 1–11.

Napier JR, Napier PH (1985) *The Natural History of the Primates*. Cambridge: MIT Press.

Nayak UV (1933) A Comparative Study of the Lorisinae and Galaginae. Unpublished PhD thesis, London: University of London.

Netter FH (2006) *Atlas of Human Anatomy*, 4th edn. Philadelphia: Saunders.

Niemitz C, Klauer G, Eins S (1984) The interscapular brown fat body in *Tarsius bancanus*, with comparison to Tupaia and man. In *Biology of Tarsiers* (ed. Niemitz C), pp. 257–273. Stuttgart: Gustav Fischer Verlag.

Nixon KC (2002) *Nona&Winclada, version 1.00.08*. Published by the author. New York: Ithaca.

Nomina Anatomica, Sixth Edition (1989) *Authorised by the Twelfth International Congress of Anatomists in London, 1985: together with Nomina histologica, third edition, and Nomina embryologica, third edition*. Edinburgh: Churchill Livingstone.

Nowak RM (1999) *Walker's Primates of the World*. Baltimore: Johns Hopkins University Press.

Ogihara N, Kunai T, Nakatsukasa M (2005) Muscle dimensions in the chimpanzee hand. *Primates* **46**, 275–280.

Ogihara N, Makishima H, Aoi S, et al. (2009) Development of an anatomically based whole-body musculoskeletal model of the Japanese macaque (*Macaca fuscata*). *Am J Phys Anthropol* **139**, 323–338.

Oishi M, Ogihara N, Endo H, et al. (2008) Muscle architecture of the upper limb in the orangutan. *Primates* **49**, 204–209.

Oishi M, Ogihara N, Endo H, et al. (2009) Dimensions of forelimb muscles in orangutans and chimpanzees. *J Anat* **215**, 373–382.

Owen R (1830–1831) On the anatomy of the orangutan (*Simia satyrus*, L.). *Proc Zool Soc Lond* **1**, 4–5, 9–10, 28–29, 66–72.

Owen R (1868) *The Anatomy of Vertebrates, Vol. 3: Mammals*. London: Longmans, Green & Co.

Parsons FG (1898a) The muscles of mammals, with special relation to human myology, Lecture 1, The skin muscles and muscles of the head and neck. *J Anat Physiol* **32**, 428–450.

Parsons FG (1898b) The muscles of mammals, with special relation to human myology: a course of lectures delivered at the Royal College of Surgeons of England – lecture II, the muscles of the shoulder and forelimb. *J Anat Physiol* **32**, 721–752.

Patterson EL (1942) The myology of *Rhinopithecus roxellanae* and *Cynopithecus niger*. *Proc Zool Soc Lond* **112**, 31–104.

Payne RC (2001) Musculoskeletal adaptations for climbing in hominoids and their role as exaptations for the acquisition of bipedalism. Unpublished PhD thesis, Liverpool: The University of Liverpool.

Pellatt A (1979a) The facial muscles of *Papio ursinus*. *S Afr J Sci* **75**, 30–37.

Pellatt A (1979b) The facial muscles of three African primates contrasted with those of *Papio ursinus*. *S Afr J Sci* **75**, 436–440.

Peterka HE (1936) A study of the myology and osteology of tree sciurids with regard to adaptation to arboreal, glissant and fossorial habits. *Trans Kansas Acad Sci* **39**, 313–332.

Pira A (1913) Beiträge zür Anatomie des Gorilla, I, Das Extremitätenmuskelsystem. *Morphol Jahrb* **47**, 309–354.

Plattner F (1923) Über die ventral-innervierte und die genuine rückenmuskulatur bei drei anthropomorphen (*Gorilla gina*, *Hylobates* und *Troglodytes niger*). *Morphol Jb* **52**, 241–280.

Polak C (1908) Die Anatomie des genus *Colobus*. *Verhandl Akad Wet Amst* **14**, 1–247.

Pough FH, Heiser JB, McFarland WN (1996) *Vertebrate Life*, 4th edn. New Jersey: Prentice-Hall.

Preuschoft H (1965) Muskeln und gelenk der vorderextremitat des gorillas. *Morphol Jahrb* **107**, 99–183.

Primrose A (1899) The anatomy of the orang-outang (*Simia satyrus*), an account of some of its external characteristics, and the myology of the extremities. *Trans Royal Can Inst* **6**, 507–594.

Primrose A (1900) The anatomy of the orang-outang. *Univ Toronto Stud Anat Ser* **1**, 1–94.

Rajalakshmi R, Anu R, Soubhagya N, et al. (2008) A study of anatomical variability of the omohyoid muscle and its clinical relevance. *Clinics* **63**, 521–524.

Raven HC (1950) Regional anatomy of the Gorilla. In *The Anatomy of the Gorilla* (ed. Gregory WK), pp. 15–188. New York: Columbia University Press.

Ribbing L, Hermansson K (1912) Kleinere muskelstudien, I11, die distale extremitatenmuskulatur eines schimpansen. *Lunds Universitets Arsskrift NF Afd 2* **8**, 1–10.

Richmond BG (1993) Anatomy of the orang-utan, *Pongo pygmaeus abelii*. Unpublished work. Stony Brook: State University of New York.

Ronquist F, Huelsenbeck JP (2003) MrBayes 3: Bayesian phylogenetic inference under mixed models. *Bioinformatics* **19**, 1572–1574.

Ronsse G (1922) La signification de l'extenseur propre de l'index chez l'homme. *Ann Bull Soc R Med Gand* **1**, 227–237.

Ruge G (1878) Zur vergleichenden Anatomie der tiefen Muskeln der Fussohle. *Morphol Jahrb* **4**, 644–659.

Ruge G (1885) Über die Gesichtsmuskulatur der halbaffen. *Gegenbaurs Morphol Jahrb* **11**, 243–315.

Ruge G (1887a) *Untersuchungen uber die Gesichtsmuskeln der Primaten*. Leipzig: W. Engelmann.

Ruge G (1887b) Die vom Facialis innervirten Muskeln des Halses, Nackens und des Schädels einen jungen *Gorilla*. *Gegenbaurs Morphol Jahrb* **12**, 459–529.

Ruge G (1890–1891) Anatomisches über den Rumpf der Hylobatiden – ein Beitrag zur Bestimmung der Stellung dieses genus im System. In *Zoologische Ergebnisse Einer Reise in Niederländisch Ost-Indien*, **Vol. 1** (ed. Weber M), pp. 366–460. Leiden: Verlag von EJ Brill.

Ruge G (1897) *Über das peripherische gebiet des nervus facialis boi wirbelthieren*. Leipzig: Festschr f Gegenbaur.

Ruge G (1910) Verbindungen des platysma mit der tiefen muskulatur des halses beim menschen. *Gegenbaurs Morphol Jahrb* **41**, 708–724.

Ruge G (1911) Gesichtsmuskulatur und Nervus facialis der Gattung *Hylobates*. *Morphol Jahrb* **44**, 129.

Saban R (1968) Musculature de la tête. In *Traité de Zoologie, XVI: 3 (Mammifères)* (ed. Grassé PP), pp. 229–472. Paris: Masson et Cie.

Sandifort G (1840) Ontleedkundige beschouwing van een' volwassen Orang-oetan (*Simia satyrus*, Linn.) van het mannelijk geslacht. Verhandelingen over de Natuurlijke geschiedenis der Nederlandische overzeesche bezittingen, door de leden der Natuurkundige commissie in Indië en andere. *Schrijvers (Zool)* **3**, 29–56.

Sanefuji M (1972) The M. masseter of the Formosan monkey. *Okajimas Folia Anat Jpn* **49**, 227–237.

Sanudo JR, Mirapeix RM, Ferreira BA (1993) A rare anomaly of abductor digiti minimi. *J Anat* **182**, 439–42.

Sargis EJ (2002a) The postcranial morphology of *Ptilocercus lowii* (Scandentia, Tupaiidae): an analysis of primatomorphan and volitantian characters. *J Mammal Evol* **9**, 137–160.

Sargis EJ (2002b) Functional morphology of the forelimb of tupaiids (Mammalia, Scandentia) and its phylogenetic implications. *J Morphol* **253**, 10–42.

Sargis EJ (2004) New views on tree shrews: the role of tupaiids in primate supraordinal relationships. *Evol Anthropol* **13**, 56–66.

Sarmiento EE (1994) Terrestrial traits in the hands and feet of gorillas. *Am Mus Novit* **3091**, 1–56.

Schmidt N, Schilling N (2007) Fiber type distribution in the shoulder muscles of the tree shrew, the cotton-top tamarin, and the squirrel monkey related to shoulder movements and forelimb loading. *J Human Evol* **52**, 401–419.

Schön MA (1968) *The Muscular System of the Red Howling Monkey*. Washington, DC: Smithsonian Institution.

Schreiber H (1928) Die Gesichtsmuskulatur der Platyrrhinen. *Morphol Jahrb* **60**, 179–295.

Schroeder van der Kolk JLC, Vrolik W (1851) Recherches d'anatomie comparee sur le genre *Stenops* d'Illiger. *Bijdr Dierk 1 Aflev* **2**, 29–52.

Schück AC (1913a) Beiträge zur Myologie der Primaten, I – der m. lat. dorsi und der m. latissimo-tricipitalis. *Morphol Jahrb* **45**, 267–294.

Schück AC (1913b) Beiträge zur Myologie der Primaten, II – 1 die gruppe sterno-cleido-mastoideus, trapezius, omo-cervicalis, 2 die gruppe levator scapulae, rhomboides, serratus anticus. *Morphol Jahrb* **46**, 355–418.

Schultz M (1984) Osteology and myology of the upper extremity of Tarsius. In *Biology of Tarsiers* (ed. Niemitz C), pp. 143–165. Stuttgart: Gustav Fischer Verlag.

Schultz M (1986) The forelimb of the Colobinae. In *Comparative Primate Biology – Systematics, Evolution and Anatomy*, **Vol. 1** (eds Swindler DR, Erwin J), pp. 559–661. New York: AR Liss.

Schumacher GH. (1961) *Funktionelle morphologie der kaumuskulatur*. Jena: VEB Gustav Fischer Verlag.

Seiler R (1970) Differences in the facial musculature of the nasal and upper-lip region in catarrhine primates and man. *Z Morphol Anthropol* **62**, 267–275.

Seiler R (1971a) A comparison between the facial muscles of Catarrhini with long and short muzzles. Proc 3rd Int Congr Primat Zürich 1970, vol I, Basel: Karger, 157–162.

Seiler R (1971b) Facial musculature and its influence on the facial bones of catarrhine Primates, I. *Morphol Jahrb* **116**, 122–142.

Seiler R (1971c) Facial musculature and its influence on the facial bones of catarrhine Primates, II. *Morphol Jahrb* **116**, 147–185.

Seiler R (1971d) Facial musculature and its influence on the facial bones of catarrhine Primates, III. *Morphol Jahrb* **116**, 347–376.

Seiler R (1971e) Facial musculature and its influence on the facial bones of catarrhine Primates, IV. *Morphol Jahrb* **116**, 456–481.

Seiler R (1973) On the function of facial muscles in different behavioral situations – a study based on muscle morphology and electromyography. *Am J Phys Anthropol* **38**, 567–71.

Seiler R (1974a) Muscles of the external ear and their function in man, chimpanzees and *Macaca*. *Morphol Jahrb* **120**, 78–122.

Seiler R (1974b) Particularities in facial muscles of *Daubentonia madagascariensis* (Gmelin 1788). *Folia Primatol* **22**, 81–96.

Seiler R (1975) On the facial muscles in *Perodicticus potto* and *Nycticebus coucang*. *Folia Primatol* **23**, 275–289.

Seiler R (1976) Die Gesichtsmuskeln. In *Primatologia, Handbuch der Primatenkunde, Bd. 4, Lieferung 6* (eds Hofer H, Schultz AH, Starck D), pp. 1–252. Basel: Karger.

Seiler R (1977) Morphological and functional differentiation of muscles – studies on the m. frontalis, auricularis superior and auricularis anterior of primates including man. *Verh Anat Ges* **71**, 1385–1388.

Seiler R (1979a) Criteria of the homology and phylogeny of facial muscles in primates including man, I, Prosimia and Platyrrhina. *Morphol Jahrb* **125**, 191–217.

Seiler R (1979b) Criteria of the homology and phylogeny of facial muscles in primates including man, II, Catarrhina. *Morphol Jahrb* **125**, 298–323.

Seiler R (1980) Ontogenesis of facial muscles in primates. *Morphol Jahrb* **126**, 841–864.

Senft M (1907) Myologie der Vorderextremitäten von Hapale jacchus, Cebus macrocephalus, und Ateles ater. Unpublished PhD Thesis, Bern: Bern University.

Shibata S (1959) On the facial musculature of *Macacus cyclopsis*. *OFAJ* **34**, 159–176.

Shoshani J, Groves CP, Simons EL, et al. (1996) Primate phylogeny: morphological vs molecular results. *Mol Phylogenet Evol* **5**, 102–154.

Silcox MT, Sargis EJ, Bloch JI, et al. (2007) Primate origins and supraordinal relationships: morphological evidence. In *Handbook of Palaeoanthropology, Vol. 2: Primate Evolution and Human Origins* (eds Henke W, Tattersall I), pp. 831–859. Springer Verlag: Heidelberg.

Skinner CE, Aziz MA (2003) New methods of dissecting the masticator space of the rhesus macaque (*Macaca mulatta*). *Primates* **44**, 311–320.

Slowinski JB (1993) ''Unordered'' versus ''ordered'' characters. *Syst Biol* **42**, 155–165.

Smith KK (1992) The evolution of the mammalian pharynx. *Zool J Linn Soc* **104**, 313–349.

Sommer A (1907) Das Muskelsystem des *Gorilla*. *Jena Z Naturwiss* **42**, 181–308.

Sonntag CF (1923) On the anatomy, physiology, and pathology of the chimpanzee. *Proc Zool Soc Lond* **23**, 323–429.

Sonntag CF (1924a) On the anatomy, physiology, and pathology of the orang-outan. *Proc Zool Soc Lond* **24**, 349–450.

Sonntag CF (1924b) *The Morphology and Evolution of the Apes and Man*. London: John Bale Sons and Danielsson, Ltd.

Sprague JA (1943) The hyoid region of placental mammals with special reference to the bats. *Am J Anat* **72**, 385–472.

Sprague JA. (1944a) The hyoid region in the insectivora. *Am J Anat* **74**, 175–216.

Sprague JA (1944b) The innervation of the pharynx in the rhesus monkey, and the formation of the pharyngeal plexus in primates. *Anat Rec* **90**, 197–208.

Stanley D (1970) An atlas of the intrinsic musculature in the hand of Pithecia monacha. Unpublished MA thesis, Baltimore: Johns Hopkins University.

Starck D (1933) Die Kaumuskulatur der Platyrrhinen. *Gegenbaurs Morphol Jahrb* **72**, 212–286.

Starck D, Schneider R (1960) Respirationsorgane. In *Primatologia III/2* (eds Hofer H, Schultz AH, Starck D), pp. 423–587. Basel: Karger.

Stern JT, Larson SG (2001) Telemetered electromyography of the supinators and pronators of the forearm in gibbons and chimpanzees: implications for the fundamental positional adaptation of hominoids. *Am J Phys Anthopol* **115**, 253–268.

Stern JT, Wells JP, Jungers WL, et al. (1980a) An electromyographic study of the pectoralis major in atelines and *Hylobates* with special reference to the evolution of a pars clavicularis. *Am J Phys Anthropol* **52**, 13–25.

Stevens JL, Meyer DM, Edgerton VR (1977) Gross anatomy of the forelimb and shoulder girdle of the Galago senegalensis. *Primates* **18**, 435–452.

Stewart TD (1936) The musculature of the anthropoids, I, neck and trunk. *Am J Phys Anthropol* **21**, 141–204.

Stout K (2000) Grip types and associated morphology of the hylobatid thumb and index finger. Unpublished MA thesis, Phoenix: Arizona State University.

Straus WL (1941a) The phylogeny of the human forearm extensors. *Hum Biol* **13**, 23–50.

Straus WL (1941b) The phylogeny of the human forearm extensors (concluded). *Hum Biol* **13**, 203–238.

Straus WL (1942a) The homologies of the forearm flexors: urodeles, lizards, mammals. *Am J Anat* **70**, 281–316.

Straus WL (1942b) Rudimentary digits in primates. *Q Rev Biol* **17**, 228–243.

Sullivan WE, Osgood CW (1925) The facialis musculature of the orang, *Simia satyrus*. *Anat Rec* **29**, 195–343.

Sullivan WE, Osgood CW (1927) The musculature of the superior extremity of the orang-utan, *Simia satyrus*. *Anat Rec* **35**, 193–239.

Susman RL (1994) Fossil evidence for early hominid tool use. *Science* **265**, 1570–1573.

Susman RL (1998) Hand function and tool behavior in early hominids. *J Hum Evol* **35**, 23–46.

Susman RL, Jungers WL, Stern JT (1982) The functional morphology of the accessory interosseous muscle in the gibbon hand: determination of locomotor and manipulatory compromises. *J Anat* **134**, 111–120.

Susman RL, Nyati L, Jassal MS (1999) Observations on the pollical palmar interosseus muscle (of Henle). *Anat Rec* **254**, 159–165.

Sutton JB (1883) On some points in the anatomy of the chimpanzee (*Anthropopithecus troglodytes*). *J Anat Physiol* **18**, 66–85.

Swindler DR, Wood CD (1973) *An Atlas of Primate Gross Anatomy: Baboon, Chimpanzee and Men*. Seattle: University of Washington Press.

Swofford DL (2003) *PAUP*. Phylogenetic Analysis Using Parsimony (*and Other Methods). Version 4*. Sunderland, MA: Sinauer Associates.

Symington J (1889) Observations on the myology of the gorilla and chimpanzee. *Rep Brit Assoc Adv Sci* **59**, 629–630.

Tavani E (1935) Rapporti del musculo tiro-aritenoideo con il ligamento vocale in alcune scimmie platirrine: *Ateleus paniscus* e *Pithecia leucocephala*. *Monit Zool Ital* **46**, 141–148.

Terminologia Anatomica (1998) *Federative Committee on Anatomical Terminology*. Stuttgard: Georg Thieme.

Testut L (1883) Le long fléchisseur propre du pouce chez l'homme et les singes. *Bull Soc Zool Fr* **8**, 164–185.

Testut L (1884) *Les anomalies musculaires chez l'homme expliquèes par l'anatomie comparée et leur importance en anthropologie*. Paris: Masson.

Thiel W (1954) Eine seltene Varietat des Venter mastoideus des M. Biventer mand. und ihre phylogenetische Deutung. *Anal Anz* **101**, 16–23.

Thiel W (1955) Die tiefe Facialismuskulatur und die Hyoidverbindung des M. biventer der Saugetiere. *Morphol Jahrb* **94**, 391–451.

Tocheri MW, Orr CM, Jacofsky MC, et al. (2008) The evolutionary history of the hominin hand since the last common ancestor of *Pan* and *Homo*. *J Anat* **212**, 544–562.

Traill TS (1821) Observations on the anatomy of the orangutan. *Mem Weiner Nat Hist Soc Edinburgh* **3**, 1–49.

Tschachmachtschjan H (1912) Über die Pectoral- und Abdominal- musculatur und über die Scalenus-Gruppe bei Primataten. *Morphol Jahrb* **44**, 297–370.

Tuttle RH (1969) Quantitative and functional studies on the hands of the Anthropoidea, I, the Hominoidea. *J Morphol* **128**, 309–363.

Tuttle RH (1970) Postural, propulsive and prehensile capabilities in the cheiridia of chimpanzees and other great apes. In *The Chimpanzee*, **Vol. 2** (ed. Bourne GH), pp. 167–263. Basel: Karger.

Tuttle RH, Cortright G (1988) Positional behavior, adaptive complexes, and evolution. In *Orang-Utan Biology* (ed. Schwartz JH), pp. 311–330. Oxford: Oxford University Press.

Tyson E (1699) *Orang-Outang sive Homo sylvestris, or the anatomy of a pygmie compared to that of a monkey, an ape and a man*. London: T. Bennet.

Van Horn RN (1972) Structural adaptations to climbing in the gibbon hand. *Am Anthropol New Ser* **74**, 326–334.

Virchow H (1915) Gesichtsmuskeln des Schimpansen. *Abh Preuss Akad Wiss* **1**, l–81.

Vrolik W (1841) *Recherches d' anatornie comparé, sur le chimpanzé*. Amsterdam: Johannes Miller.

Walker WF, Homberger DG (1997) *Anatomy and Dissection of the Rat*, 3rd edn. New York: Freeman Company.

Wall CE, Larson SG, Stern JT (1994) EMG of the digastric muscle in gibbon and orangutan: functional consequences of the loss of the anterior digastric in orangutans. *Am J Phys Anthropol* **94**, 549–567.

Waller BM, Vick SJ, Parr LA, et al. (2006) Intramuscular electrical stimulation of facial muscles in humans and chimpanzees: Duchenne revisited and extended. *Emotion* **6**, 367–382.

Waller BM, Burrows AM, Cray JJ (2008a) Selection for universal facial emotion. *Emotion* **8**, 435–439.

Waller BM, Parr LA, Gothard KM, et al. (2008b) Mapping the contribution of single muscles to facial movements in the rhesus macaque. *Physiol Behav* **95**, 93–100.

Whidden HP (2000) Comparative myology of moles and the phylogeny of the Talpidae (Mammalia, Lipotyphla). *Am Mus Novit* **3294**, 1–53.

Wilder B (1862) Contributions to the comparative myology of the chimpanzee. *Boston J Nat Hist* **6**, 352–384.

Wildman DE, Jameson NM, Opazo JC, et al. (2009) A fully resolved genus level phylogeny of neotropical primates (Platyrrhini). *Mol Phylogenet Evol* **53**, 694–702.

Williams BA (2007) Comparing levels of homoplasy in the primate skeleton. *J Hum Evol* **52**, 480–489.

Windle BCA (1886a) Notes on the myology of *Midas rosalia*, with remarks on the muscular system of apes. *Proc Bgham Nat Hist Soc* **5**, 152–166.

Windle BCA (1886b) Notes on the myology of *Hapale jacchus*. *Proc Bgham Nat Hist Soc* **5**, 277–281.

Winkler LA (1989) Morphology and relationships of the orangutan fatty cheek pads. *Am J Primatol* **17**, 305–320.

Winkler LA (1991) Morphology and variability of masticatory structures in the orangutan. *Int J Primatol* **12**, 45–65.

Wood J (1867a) On human muscular variations and their relation to comparative anatomy. *J Anat Physiol* **1867**, 44–59.

Wood J (1867b) Variations in human myology observed during the Winter Session of 1866–7 at King's College London. *Proc Roy Soc Lond* **15**, 518–545.

Wood J (1870) On a group of varieties of the muscles of the human neck, shoulder, and chest, with their transitional forms and homologies in the Mammalia. *Philos Trans R Soc Lond* **160**, 83–116.

Wood Jones F (1920) *The Principles of Anatomy as Seen in the Hand*. London: J. & A. Churchill.

Woollard HH (1925) The anatomy of *Tarsius spectrum*. *Proc Zool Soc Lond* **70**, 1071–1184.

Wyman J (1855) An account of the dissection of a black chimpanzee. *Proc Boston Soc Nat Hist* **5**, 270–275.

Ziegler AC (1964) Brachiating adaptations of chimpanzee upper limb musculature. *Am J Phys Anthropol* **22**, 15–32.

Ziemer LK (1972) An atlas of the skeleton and musculature of the shoulder, arm and forearm of Pithecia monacha. Unpublished MA thesis, Baltimore: Johns Hopkins University.

Appendix 1: List of the 166 characters included in the cladistic analyses

*This list is divided into nine subgroups of muscles, following the nomenclature of Diogo & Abdala (2010). The Length (*L*), Consistency Index (CI) and Retention Index (RI) obtained for each character in the most parsimonious tree obtained from the heuristic analysis of the whole dataset (chars. 1–166) are given after the name of each respective character.

Mandibular muscles

1. *Intermandibularis anterior is not a distinct muscle* (*L 1, CI 100, RI 100*). [**0**] As explained by Diogo et al. (2008a,b), various non-mammalian tetrapods and non-primate mammals, including *Rattus* and *Tupaia*, usually have an at least partially fleshy, separate

intermandibularis anterior, which is often named 'transversus mandibularis' in taxa such as rodents (e.g. Greene, 1935; Peterka, 1936; Bryant, 1945; Walker & Homberger, 1997). Saban (1968) and Gunnell & Simmons (2005) suggested that in *Tupaia* the intermandibularis anterior is often completely aponeurotic, but a fleshy, separate intermandibularis anterior was found in all the *Tupaia* specimens dissected by Le Gros Clark (1924), Sprague (1944a) and by us. [**1**] In all primates included in this analysis, as well as in *Cynocephalus*, there is usually no fleshy, separate intermandibularis anterior. This was confirmed in *Cynocephalus* by Leche (1886), Saban (1968), Gunnell & Simmons (2005), and by us, and in the primates coded as CS-1 by our dissections and review of the literature.

2. *Digastricus anterior is not a distinct muscle (L 1, AUTAPOMORPHY)*. Contrary to taxa of CS-0 [**0**], in *Pongo* [**1**] the digastricus anterior is usually not present as a distinct muscle (e.g. Owen, 1830–1831; Chapman, 1880; Sonntag, 1924a; Cachel, 1984; Winkler, 1991; Richmond, 1993; Wall et al. 1994; our dissections). A distinct digastricus anterior was however reported in an orangutan specimen examined by Parsons (1898a).

3. *Digastricus anterior is not in contact with its counterpart for most of its length (L 6, CI 16, RI 37)*. [**0**] In various non-primate taxa including *Rattus* and *Tupaia* (Le Gros Clark, 1924; Greene, 1935; Sprague, 1944a; DuBrul, 1958; our dissections), as well as in primates such as *Tarsius, Saimiri, Macaca*, *Papio*, *Gorilla* and *Pan*, the main body of the digastricus anterior usually contacts that of its counterpart (ventrally in the midline) for most of its length. Fig. 13 of plate 5 of Burmeister (1846) shows a *Tarsius* specimen where the digastricus anterior does not seem to meet its counterpart, but the descriptions of other authors (e.g. Woollard, 1925; Lightoller, 1934, 1939; Saban, 1968) clearly state that in *Tarsius* the muscle does usually meet its counterpart for most of its length, and this was corroborated by our dissections. Such a contact was also found in *Saimiri* by us, in *Macaca* and *Papio* by Howell & Straus (1933), Thiel (1954, 1955), DuBrul (1958), Hill (1970), Swindler & Wood (1973), Hilloowala (1975) and by us, and in *Pan* by Vrolik (1841), Wilder (1862), Sonntag (1923), Miller (1952), DuBrul (1958), Starck & Schneider (1960), Göllner (1982) and by us. Regarding *Gorilla*, in the fetal specimen dissected by Deniker (1885) the digastricus anterior does not contact its counterpart for most of its length, and, probably based on this work, Gibbs (1999) and Gibbs et al. (2000, 2002) suggested that this is the usual condition for gorillas. However, the muscle seems to contact its counterpart for most of its length in the gorilla illustrated by Bischoff (1880) and in the gorilla illustrated by Hosokawa & Kamiya (1961–1962), and such a contact was also present in the adult VU GG1 specimen dissected by us. Therefore, the usual condition for *Gorilla* is that there is contact for most of the length of the muscle; this taxon is thus coded as CS-0. [**1**] In *Cynocephalus*, *Lemur*, *Propithecus*, *Loris*, *Nycticebus, Aotus, Callithrix*, *Pithecia*, *Colobus*, *Cercopithecus*, *Hylobates* and *Homo* the muscle does not contact its counterpart for most of its length. This is the case in *Cynocephalus* according to Leche (1886) and to our dissections, in *Lemur* to Starck & Schneider (1960), Saban (1968) and our dissections, in *Loris* and *Nycticebus* to Loth (1931), Saban (1968) and our observations, in *Propithecus*, *Pithecia* and *Colobus* to our dissections, and in *Callithrix* and *Aotus* to Beattie (1927), Immel (1997) and to our observations (Hilloowala, 1975 suggested that in *Callithrix* the muscle contacts its counterpart, but, as noted by Lightoller, 1934 and corroborated by our observations, in this taxon the muscle is associated with substantial fibrous tissue that does reach the midline, but the muscle is usually not directly connected to its counterpart). Dobson (1881) and Hill (1966) suggested that in at least some *Cercopithecus* specimens the muscle contacts its counterpart, the two structures being connected by an aponeurosis according to Dobson (1881). However, the detailed work of DuBrul (1958) and our dissections indicate that in this taxon the muscle does usually not contact its counterpart for most of its length; therefore, *Cercopithecus* is coded as CS-1, as is *Colobus*. Concerning *Hylobates*, some contact seems to be present in the *Hylobates* specimen shown in fig. 1 of Wall et al. (1994), and such a condition was said to be usually present in this genus, in Gibbs et al. (2002). However, according to the detailed works of Deniker (1885), Kohlbrügge (1890–1892) and DuBrul (1958) and to our dissections, the usual condition for *Hylobates* is that there is no contact for most of the length of the muscle, so this genus is also coded as CS-1. [-] Inapplicable in *Pongo*, because the digastricus anterior is usually not present as a distinct muscle.

4. *Digastricus anterior is not connected to the digastricus posterior by a well-defined intermediate tendon (L 1, AUTAPOMORPHY)*. [**0**] In non-primate taxa such as *Rattus* and *Tupaia*, as well as in most primates, including *Lemur*, *Propithecus*, *Loris*, *Nycticebus*, *Tarsius, Callithrix, Aotus*, *Saimiri*, *Pithecia*, *Macaca*, *Papio*, *Cercopithecus*, *Colobus*, *Hylobates*, *Gorilla*, *Pan* and *Homo*, the digastricus anterior is usually connected to the digastricus posterior by a well-defined intermediate tendon, the two muscles forming the 'digastricus conjunctus' *sensu* Edgeworth (1935). This morphology is seen in rats and mice and in *Tupaia* according to Le Gros Clark (1924), Greene (1935), Sprague (1944a), DuBrul (1958), Walker & Homberger (1997), Barrow & Capecchi (1999), and to our dissections. An intermediate tendon was also found in *Lemur* by Murie & Mivart (1872), Saban (1968) and by us, in *Loris* by Mivart & Murie (1865), Saban (1968) and by us, and in *Propithecus* by us. Allen (1897) stated that *Tarsius* has no intermediate tendon, but the descriptions of other authors (e.g. Burmeister, 1846; Woollard, 1925; Lightoller, 1934; Edgeworth, 1935; Hill, 1955; Saban, 1968) as well as our dissections, clearly indicate that *Tarsius* usually does have a well-defined intermediate tendon. Such a tendon was also found in *Callithrix* and *Aotus* by Beattie (1927), Lightoller (1934), Hilloowala (1975), Immel (1997) and by us, in *Saimiri* and *Pithecia* by us, in *Macaca, Colobus, Papio* and *Cercopithecus* by Polak (1908), Loth (1931), Howell & Straus (1933), Thiel (1954, 1955), DuBrul (1958), Hill (1970), Swindler & Wood (1973), Hilloowala (1975) and by us, in *Hylobates* by Kohlbrügge (1890–1892), DuBrul (1958) and Wall et al. (1994) and by us, in *Gorilla* by Raven (1950) and by us, and in *Pan* by Wilder (1862), Sonntag (1923), Miller (1952), Göllner (1982) and by us. Loth (1931) suggested that there is no intermediate tendon in '*Nycticebus* sp.', but it is not clear if he was referring to a species that is currently included in the genus *Nycticebus*; in fact, an intermediate tendon was clearly present in all the *Nycticebus* specimens dissected by us, so this taxon is coded as CS-0. [**1**] As described by Saban (1968) and Diogo (2009), in *Cynocephalus* the digastricus anterior and digastricus posterior are not connected by a well-defined tendon, but instead by a short muscular intersection, forming the 'digastricus intersectus' *sensu* Edgeworth (1935; e.g. fig. 2 of Diogo, 2009). [-] Inapplicable in *Pongo*, because the digastricus anterior is usually not present as a distinct muscle.

5. *Digastricus anterior attaches onto the angle of the mandible (L 1, AUTAPOMORPHY)*. Contrary to taxa of CS-0 (in which the digastricus anterior usually inserts onto and/or near the man-

dibular symphysis) [**0**], in *Cynocephalus* [**1**] the digastricus anterior usually inserts onto the angle of the mandible (e.g. Leche, 1886; our dissections). [-] Inapplicable in *Pongo*, because the digastricus anterior is usually not present as a distinct muscle.

6. *Tensor tympani is not a distinct muscle (L 1, AUTAPOMORPHY)*. Contrary to taxa of CS-0 [**0**], in *Tupaia* [**1**] the tensor tympani is usually not present as a distinct muscle (a small tensor tympani was reported in a few *Tupaia* specimens by Saban (1968) – see Diogo et al. (2008b); however, as explained in the recent review of Gunnell & Simmons (2005) and particularly in the detailed work of Maier (2008), the tensor tympani is usually not present as a distinct muscle in the members of this genus). There is no literature about, and we could also not discern if this muscle is present or not in the dissected specimens of, *Colobus*, *Cercopithecus* and *Pongo*; therefore these three taxa are coded as '?'.

7. *Chorda tympani passes above the tensor tympani (L 1, CI 100, RI 100)*. As explained by Maier (2008), in non-primate taxa such as *Rattus* and *Cynocephalus* and most non-anthropoid primates, including *Lemur*, *Propithecus*, *Loris* and *Tarsius* [**0**], the chorda tympani passes mainly below the tensor tympani (hypotensoric). In most anthropoids, including *Aotus*, *Callithrix*, *Saimiri*, *Pithecia*, *Macaca*, *Papio*, *Hylobates*, *Gorilla*, *Pan* and *Homo* [**1**], it passes mainly above the muscle (epitensoric). Maier (2008) did not refer to *Nycticebus*, *Colobus*, *Cercopithecus* and *Pongo*, and we could not discern this feature in these taxa, so they are coded as '?'. [-] Inapplicable in *Tupaia*, because the tensor tympani is usually not present as a distinct muscle.

8. *Temporalis has a pars suprazygomatica (L 3, CI 33, RI 66)*. Contrary to adults of taxa of CS-0 [**0**], in adults of *Tupaia, Lemur, Propithecus, Loris, Nycticebus, Tarsius, Aotus, Callithrix*, *Saimiri, Pithecia, Colobus, Cercopithecus,* and *Papio* [**1**] there is a distinct pars suprazygomatica (e.g. fig. 17 of Le Gros Clark, 1924; fig. 206 of Saban, 1968) of the temporalis. This structure was found in adult specimens of *Tupaia* by Le Gros Clark (1924) and by us, of *Tarsius* by Le Gros Clark (1926), Fiedler (1953), Saban (1968) and by us, and of *Propithecus*, *Lemur*, *Loris* and *Nycticebus* by us. Starck (1933) reported a pars suprazygomatica in *Callithrix, Saimiri* and *Pithecia* adults, and the 'posterior portion' of the temporalis reported in *Callithrix* adults by Beattie (1927) and Hill (1957) clearly seems to correspond to, or to include, the pars suprazygomatica we found in *Aotus*, *Callithrix, Pithecia* and *Saimiri* adults (e.g. fig. 22 of Hill (1957). A pars suprazygomatica was also reported by Hill (1970) in *Papio* adults (designated as 'zygomatic portion of the temporalis'), and by Polak (1908) in *Colobus* adults, and we effectively found this structure in adults of these two taxa and also of *Cercopithecus*. It should be noted that some neonates of *Pan* dissected by Göllner (1982) and by us have a pars suprazygomatica of the temporalis, but that in the adults of this genus (dissected by us and by other authors, including Göllner, 1982) the pars suprazygomatica is usually not present as a distinct bundle, so this taxon is coded as CS-0. Regarding *Macaca*, Howell & Straus (1933), Sanefuji (1972), Kikuya (1973), Nagashima et al. (1975) and Hill (1974) did not really refer to this structure, so it is not always clear if it was, or not, present in the adult specimens dissected by them. Fig. 191 of Saban (1968) shows an adult *Macaca* specimen in which the pars suprazygomatica is apparently slightly differentiated, but we could not discern if this structure was present, or not, in the adult *Macaca* specimens dissected by us; therefore, until more information is available, this genus is coded as '?'. Regarding *Gorilla*, Göllner (1982) described a pars suprazygomatica in neonates, but suggested that this structure is not differentiated in adults of this genus; however, on both sides of the VU GG1 adult gorilla dissected by us there is clearly a distinct pars suprazygomatica, so this genus is coded here as '?'.

9. *Pterygoideus lateralis has well differentiated inferior and superior heads (L 2, CI 50, RI 85)*. Contrary to non-primate taxa such as *Rattus*, *Cynocephalus* and *Tupaia* and primates as *Lemur, Propithecus*, *Tarsius* and *Callithrix* [**0**], in *Aotus*, *Pithecia*, *Saimiri*, *Macaca*, *Papio, Colobus, Cercopithecus, Hylobates*, *Pongo*, *Gorilla, Pan* and *Homo* [**1**] the pterygoideus lateralis is usually well differentiated into distinct superior and inferior heads. As described by Le Gros Clark (1924) and Greene (1935) and corroborated by our dissections, the two heads are usually not present as distinct structures in *Rattus*, *Tupaia* and *Cynocephalus*. These heads were also not described by Murie & Mivart (1872) in *Lemur*. On one side of the body of our *Lemur catta* GWUANT LC1 specimen there was seemingly no division into superior and inferior heads, but on the other side these two heads do seem to be poorly differentiated, the superior head being thinner and going mainly to the temporomandibular joint, and the inferior head being broader and going mainly to the condyloid process of the mandible. Such poor differentiation was also present on both sides of our *Propithecus verreauxi* GWUANT PV1 specimen. Burmeister (1846) and Woollard (1925) did not describe distinct superior and inferior heads in *Tarsius*; on both sides of our *Tarsius syrichta* CMNH M-3135 specimen the pterygoideus lateralis seemed to be mainly undivided, although a branch of the trigeminal nerve passed between the superior (thinner) and the inferior (broader) portions of the muscle. Beattie (1927) and Hill (1957) also did not report distinct superior and inferior heads in *Callithrix*; we did not find these heads in this taxon. Therefore, our review of the literature and our dissections indicate that the inferior and superior heads are poorly differentiated, or are not differentiated at all, in *Lemur*, *Propithecus*, *Tarsius* and *Callithrix*. Distinct superior and inferior heads are however well differentiated in *Aotus, Saimiri* and *Pithecia* according to Starck (1933) and to our dissections, in *Macaca*, *Papio*, *Cercopithecus*, *Colobus*, *Hylobates* and *Pongo* according to Polak (1908), Sonntag (1924a,b), Howell & Straus (1933), Boyer (1939), Schumacher (1961), Saban (1968), Hill (1970), Sanefuji (1972), Kikuya (1973), Swindler & Wood (1973), Nagashima et al. (1975), Hill (1974), Winkler (1991), Wall et al. (1994), Gibbs (1999), Skinner & Aziz (2003), and to our dissections, although Kohlbrügge (1890–1892) and Hill (1966) did not refer to these two heads in their descriptions of *Hylobates* and *Cercopithecus*, respectively. Göllner (1982) suggested that these heads are not really distinct in the neonate and adult chimpanzees dissected by him, but the two heads were clearly present in all the *Pan* specimens dissected by Gratiolet & Alix (1866), Sonntag (1923), Miller (1952), and by us (including neonates and adults). Raven (1950) did not describe these two heads in *Gorilla*, and Göllner (1982) stated that in the two infant gorillas dissected by him the pterygoideus lateralis could not be clearly divided into these heads. However, as explained just above, the latter author also did a similar statement regarding *Pan*, which usually does have both heads. Moreover, the two heads were clearly differentiated in both sides of the VU GG1 adult gorilla specimen dissected by us, so *Gorilla* is coded as CS-1. *Loris* and *Nycticebus* are coded as '?' due to the lack of information in the literature (it was not possible to discern this feature in the *Loris* and *Nycticebus* specimens dissected by us).

Hyoid muscles

10. *Stylohyoideus is not a distinct muscle (L 2, CI 50, RI 50)*. Contrary to taxa of CS-0 [**0**], in *Cynocephalus, Saimiri* and *Callithrix* [**1**] the stylohyoideus is usually not present as a distinct muscle. The muscle is usually missing in *Cynocephalus* according to Leche (1886), Gunnell & Simmons (2005), and our dissections (it should be noted that the structure that Saban, 1968 designated as 'stylohyoideus' in colugos corresponds very likely to the sphincter colli profundus *sensu* the present work: see Diogo, 2009). The stylohyoideus was missing in one specimen of *Callithrix jacchus* dissected by Lightoller (1934) and was apparently also missing in the 14 specimens of the same species dissected by Beattie (1927); this author described all the suprahyoid muscles of these specimens in detail but he did not refer to the stylohyoideus. The stylohyoideus was also not described in *Callithrix* by Hill (1957), and was also not found in the *Callithrix jacchus* and *Saimiri sciureus* specimens dissected by us. It cannot be discarded that the 'stylohyoideus' reported in one *Callithrix jacchus* specimen by Hilloowala (1975) could correspond to the stylohyoideus *sensu* the present work, because Hilloowala did not illustrate the structure that she designated as 'stylohyoideus'. However, that structure might well correspond instead to the stylopharyngeus, because, as explained above, in the specimens of this species dissected by us and by Beattie (1927) and Lightoller (1934) the stylohyoideus was not present, while the stylopharyngeus was partially originated from the stylomandibular ligament and partially inserted onto the hyoid bone, as was the 'stylohyoideus' reported by Hilloowala (1975). Be that as it may, even if the 'stylohyoideus' reported by Hilloowala (1975) does correspond to the stylohyoideus *sensu* the present work, it seems clear that this muscle is usually not present in *Callithrix* and *Saimiri*, as indicated by Beattie (1927), Lightoller (1934) and by our dissections.

11. *Stylohyoideus is partially pierced by the digastricus posterior and/or by the intermediate digastric tendon (L 3, CI 33, RI 66)*. [**0**] In numerous non-primate eutherians, including *Rattus*, as well as in primates such as *Lemur*, *Tarsius, Loris, Nycticebus, Propithecus, Aotus*, *Hylobates* and *Pongo* the stylohyoideus is usually not pierced by the digastricus posterior nor by the intermediate digastric tendon. This was corroborated in *Rattus*, *Tarsius, Loris, Nycticebus, Propithecus, Lemur* and *Aotus* by Burmeister (1846), Woollard (1925), Lightoller (1934), Greene (1935), Saban (1968), Immel (1997) and by us. There is also no piercing in *Pongo* according to Sonntag (1924a), Gibbs (1999), and to our observations. Regarding *Hylobates*, the usual condition clearly seems to be that in which there is no piercing, because there was no piercing in the fetus dissected by Deniker (1885) and in five of the six sides of the three specimens reported by Kohlbrügge (1890–1892; two *H. syndactylus* and one *H. agilis*), although there was a partial piercing on the right side of one of these specimens, and in the specimen reported by Bischoff (1870) (we could not check this feature appropriately in the *Hylobates* specimens dissected by us). [**1**] In *Tupaia*, *Cercopithecus*, *Papio, Colobus*, *Gorilla*, *Pan* and *Homo* the stylohyoideus is usually partially pierced by the digastricus posterior and/or by the intermediate digastric tendon. Regarding *Tupaia*, Le Gros Clark (1924) and Lightoller (1934) stated that the stylohyoideus is mainly ventral to the digastricus posterior, but in the detailed and more recent accounts provided by Sprague (1944a), Immel (1997) and Gunnell & Simmons (2005) it is clearly stated that the former is partially pierced by the latter, and this configuration was corroborated by our own dissections. Piercing was also found in *Cercopithecus* according to Hill (1966) and to our dissections and in *Gorilla* according to Deniker (1885), Raven (1950), Gibbs (1999), and to our observations. Concerning *Papio*, Hilloowala (1975) stated that in the *P. anubis* specimens dissected by her the muscle was not pierced, but Hill (1970) clearly stated that there is usually a piercing in *Papio*, as shown for instance in the *P. cynocephalus* and *P. anubis* specimens illustrated in his fig. 28, and as found in our dissections. Polak (1908) also suggested that there is no piercing in *Colobus guereza*, but our dissections indicate there is piercing in this taxon. Such piercing was also found in the *Pan* specimens dissected by Sonntag (1923) and in four of the five *Pan* specimens dissected by us, although in the other chimpanzee specimen that we dissected, as well as in a bonobo specimen dissected by Miller (1952), the stylohyoideus was mainly superficial to the posterior digastricus. Concerning *Macaca*, according to Howell & Straus (1933) and to our dissections the stylohyoideus is usually not pierced by the digastricus posterior, lying completely deep to this muscle, but Hilloowala (1975) analyzed this in great detail in four specimens of *Macaca mulatta*, and stated that in these specimens the stylohyoideus was pierced by the posterior digastricus, and this seems also to be the case in the *Macaca* specimen illustrated by Thiel (1954, 1955) and Saban (1968; e.g. fig. 221D of Saban, 1968). Therefore, until more information is available *Macaca* is coded as '?'; *Pithecia* is also coded as '?' (it was not possible to check this appropriately in our GWUANT PP1 and VU PP1 specimens). [**-**] Inapplicable in *Cynocephalus, Saimiri* and *Callithrix* because the stylohyoideus is usually not present as a distinct muscle.

12. *Stylohyoideus is inserted near the midline (L 1, CI 100, RI 100)*. As noted by Lightoller (1934) and Edgeworth (1935) and corroborated by our dissections, contrary to taxa of CS-0 [**0**], in lemuriforms such as *Propithecus* and *Lemur* [**1**] the distal insertion of the stylohyoideus onto the hyoid bone is peculiarly situated near the midline (i.e. the muscle almost reaches, or sometimes even contacts, its counterpart medially). [**-**] Inapplicable in *Cynocephalus, Saimiri* and *Callithrix* because stylohyoideus is usually not present as a distinct muscle.

13. *Stylolaryngeus is a distinct muscle (L 1, AUTAPOMORPHY)*. Contrary to taxa of CS-0 [**0**], orangutans [**1**] usually have a distinct stylolaryngeus muscle that runs from the styloid process to the laryngeal sac and is very likely derived from the stylohyoideus (e.g. Fick, 1895a,b; Sonntag, 1924a,b; Falk & Nicholls, 1992; Falk, 1993).

14. *Digastricus posterior is directly attached onto the mandible (L 1, AUTAPOMORPHY)*. Contrary to taxa of CS-0 (in which the anterior portion of the digastricus posterior is usually connected to the posterior portion of the digastricus anterior) [**0**], in *Pongo* [**1**] the anterior portion of the digastricus posterior is usually directly attached onto the back of the mandible (e.g. Owen, 1830–1831; Chapman, 1880; Sonntag, 1924a; Cachel, 1984; Winkler, 1991; Richmond, 1993; Wall et al. 1994; our dissections). As explained above, in an orangutan specimen described by Parsons (1898a) there was a distinct digastricus anterior, and the anterior portion of the digastricus posterior was connected to this muscle, as is the case in taxa of CS-0, and not to the back of the mandible, as is the almost always the case in *Pongo*. Another rare configuration for orangutans was reported by Lightoller (1939): fig. 37 of his plate 8, shows a specimen in

which the digastricus posterior inserts mainly onto the angle of the mandible, as is usually the case in the members of this genus, but also sends a very thin musculotendinous slip to the hyoid bone, near the insertion of the stylohyoideus.

15. *Jugulohyoideus is not a distinct muscle (L 2, CI 50, RI 80)*. [**0**] The presence of a distinct jugulohyoideus (often designated as 'mastoideostyloideus', mainly running from the mastoid process and/or adjacent regions to the hyoid apparatus and/or the ligaments connecting this apparatus to the cranium) seems to represent the plesiomorphic condition within the taxa included in this cladistic analysis. This is because the jugulohyoideus, which is probably derived from the stylohyoideus and/or the digastricus posterior (e.g. Diogo et al. 2008b) is present in primates such as *Lemur*, *Nycticebus* and *Propithecus* (present in lemuriforms and Galagidae according to Saban, 1968; and in 'lemurs' according to Meckel, 1820–1838; e.g. fig. 270 of Saban 1968; it was found in the *Lemur* and *Propithecus* specimens dissected by us, and it seemed to be present in two *Nycticebus* specimens in which we could discern this feature), in dermopterans and scandentians (including *Cynocephalus* and *Tupaia*: e.g. Le Gros Clark, 1926; Lightoller, 1934; Sprague, 1944a; Saban, 1968; Diogo, 2009; Diogo et al. 2008b; our dissections), in rodents (including hamsters and mice, being, however, secondarily lost in the genus *Rattus*, which is thus coded as CS-1: e.g. Aikawa & Shimozawa (1994), and in various other non-primate mammals (e.g. Huber, 1930a,b, 1931; Sprague, 1944a; Saban, 1968). [**1**] In *Rattus*, as well as in primates such as *Tarsius*, *Aotus*, *Callithrix*, *Pithecia*, *Saimiri*, *Macaca, Colobus, Papio, Cercopithecus* and hominoids, the jugulohyoideus is usually not present as a distinct muscle (e.g. Lightoller, 1934; Howell & Straus, 1933; this work). It should be noted that we found a very thin and small jugulohyoideus on the right side of our *Tarsius syrichta* CMNH M-3135 specimen, while the muscle was seemingly completely missing on the left side of this specimen. Such a thin muscle might perhaps be present in other specimens of this and/or other species of *Tarsius*, and not detected by other authors due to its small size. However, the dissections and descriptions of Lightoller (1934) are very detailed, and this author clearly stated that he did not found a jugulohyoideus in the three *Tarsius tarsier* specimens dissected by him. This indicates that the jugulohyoideus might be present as a vestigial structure in a few *Tarsius* specimens, but is probably usually absent in the members of this genus; therefore *Tarsius* is coded as CS-1. *Loris* is coded as '?' because there is no information in the literature and we could not discern if the muscle was present or not in the *Loris* specimen dissected by us.

16. *Platysma cervicale is not a distinct muscle (L 1, CI 100, RI 100)*. Contrary to taxa of CS-0 [**0**], in juveniles and adults of *Pan*, *Homo* and *Gorilla* [**1**] the platysma cervicale is usually markedly reduced or completely missing. Juveniles and adult members of the genus *Pan* usually do not have a well-developed platysma cervicale, often having instead a small muscle 'transversus nuchae' (e.g. Gratiolet & Alix, 1866; Broca, 1869; Champneys, 1872; Macalister, 1871; Chapman, 1879; Sutton, 1883; Virchow, 1915; Sonntag, 1923; Sullivan & Osgood, 1925; Huber, 1930b, 1931; Loth, 1931; Miller, 1952; Swindler & Wood, 1973; Pellatt, 1979b; our dissections; e.g. fig. 1 of plate IX of Gratiolet & Alix, 1866; fig. 5 of Sullivan & Osgood, 1925; fig. 35 of Huber, 1930b; fig. 11 of Huber, 1931; fig. 785 of Edgeworth, 1935; fig. 12 of Miller, 1952). This 'transversus nuchae' clearly seems to be a vestigial remaining of the platysma cervicale (e.g. Loth, 1931; Aziz, 1981; Diogo et al. 2008b, 2009b). Regarding modern humans, the platysma cervicale is said to be completely missing in about 75% of adults, the other 25% having a small 'transversus nuchae' similar to that often found in juveniles and adults of the genus *Pan* (e.g. Huber, 1930b, 1931; Loth, 1931; Aziz, 1981; Terminologia Anatomica, 1998). Interestingly, Gasser's (1967) study of human development shows that modern human embryos do usually have a well developed platysma cervicale ('occipital platysma' *sensu* Gasser, 1967), but that later in human development this muscle usually becomes very reduced or absent. Regarding *Gorilla*, Deniker (1885) described a 'platysma cervicale' in the fetus dissected by him (e.g. his plate XXVI), and Bischoff (1880), Chudzinski (1885) and Raven (1950) suggested that they also found a 'platysma cervicale' in juvenile and adult gorillas, corresponding for instance to the 'nuchal and deep portions of the platysma' described by Raven (1950). However, in works that were specifically focused on the facial musculature, such as Ruge (1885, 1887a,b, 1897, 1910) and Huber (1930b, 1931), it was pointed out that in gorillas the platysma cervicale is actually usually reduced, or even absent (e.g. the illustrations of these latter authors). Our detailed observations of a fresh adult gorilla corroborated the statements of Ruge (1887b) and Huber (1930b, 1931). That is, at first sight the platysma cervicale seems to be present, because there are some muscular fibers passing just inferiorly to the ear. However, as is the case in the chimpanzee illustrated in fig. 143 of Seiler (1976), a more detailed observation reveals that these muscular fibers are actually part of the platysma myoides because, posteriorly to the ear, the muscle is markedly oriented inferiorly, as is also the case in modern humans and as shown in the gorillas illustrated in fig. 50 of Hartmann (1886) and fig. 36 of Huber (1930b). That is, this portion of the platysma myoides runs mainly inferiorly, partially covering the pectoralis major, the deltoideus, and the acromial region, but does not extend posteriorly to reach the nuchal region. Contrary to *Homo*, *Gorilla* and *Pan*, the orangutans and hylobatids, as well as all the other primates included in this cladistic analysis, are coded as CS-0. Influential authors such as Owen (1830–1831) and Sonntag (1924a) used the name 'platysma myoides' to describe the whole platysma complex of orangutans, and this nomenclature has been followed by various researchers, including Seiler (1976), and was thus also followed in Diogo et al.'s (2009b) review. However, Owen (1830–1831) stated that the 'platysma myoides' of orangutans incorporated the platysma myoides of modern humans plus the platysma cervicale of other mammals, and fig. 1 of Sonntag (1924a) corroborates this statement. The statement was also corroborated by numerous other authors, including Deniker & Boulart (1885), Sullivan & Osgood (1925), Lightoller (1928a, 1940a), Huber (1930b, 1931), Edgeworth (1935) and Winkler (1989), who reported that juvenile and adult orangutans have a well developed platysma cervicale ('notoplatysma'). Our recent dissections of numerous primates and our comparisons with the data provided in the literature corroborate the statements of all of these latter authors. That is, juvenile and adult orangutans and hylobatids usually have a well-developed platysma cervicale similar to the muscle that is found in most other primates and that is usually markedly reduced, or even absent, in *Pan* (including the neonates dissected by us), *Gorilla* and *Homo*. This is clearly illustrated in the dioptogram A2 of Lightoller (1928a), fig. 1 of Sonntag (1924a), fig. 4 of Sullivan & Osgood (1925) and fig. 783 of Edgeworth (1935), figs 34 of Huber (1930b) and figs 9 and 10 of Huber (1931), figs 132 and 135 of Seiler (1976), and fig. 2 of Winkler (1989; compare, for instance, these latter

figures with the usual modern human condition shown in plate 26 of Netter, 2006).

17. *Platysma myoides is divided into a superior, superficial bundle, and an inferior, deep bundle (L 1, CI 100, RI 100).* Contrary to taxa of CS-0 [**0**], in *Macaca*, *Papio* and *Cercopithecus* [**1**] the platysma myoides is mainly divided into a superior, superficial bundle and an inferior, deeper bundle, which are essentially separated by a well-developed cheek pouch (e.g. Lightoller, 1928a; Huber, 1930b, 1931, 1933; Hill, 1966, 1970; Swindler & Wood, 1973; Seiler, 1976; Pellatt, 1979a,b; our dissections).

18. *'Cervico-auriculo-occipitalis' is not a distinct bundle of the occipitalis (L 1, CI 100, RI 100).* Contrary to numerous non-primate mammals, including *Rattus*, *Tupaia* and *Cynocephalus*, as well as in primates such as *Lemur*, *Tarsius*, *Propithecus*, *Loris, Nycticebus*, *Callithrix*, *Aotus*, *Saimiri*, *Pithecia*, *Macaca*, *Cercopithecus*, *Colobus, Papio* and *Hylobates* [**0**], in *Homo*, *Pan*, *Pongo* and *Gorilla* [**1**] the occipitalis is usually not differentiated into a main body (or 'occipitalis proprius') and a 'cervico-auriculo-occipitalis' (*sensu* Lightoller, 1925, 1928a,b, 1934, 1939, 1940a,b, 1942; which is a lateral/superficial bundle of the occipitalis that often runs anterolaterally from the occipital region to the posterior portion of the ear and that sometimes covers part of the auricularis posterior in lateral view). The 'cervico-auriculo-occipitalis' is present in *Tupaia* as reported by Lightoller (1934) and Seiler (1976) and corroborated by us, and we also found it in *Rattus* and *Cynocephalus*. It is also found in strepsirrhines, *Tarsius*, *Papio*, *Colobus, Macaca* and *Cercopithecus* according to Burmeister (1846), Woollard (1925), Lightoller (1928a, 1934, 1939), Edgeworth (1935), Hill (1966, 1970), Seiler (1975, 1976), Pellatt (1979a,b) and to our dissections, in *Callithrix*, *Aotus, Saimiri* and *Pithecia* according to Beattie (1927), Lightoller (1934), Seiler (1976) and to our observations, in *Hylobates* according to Deniker (1885), Ruge (1911), Huber (1930b, 1931), Loth (1931), Edgeworth (1935), Seiler (1976) and to our dissections, and in *Macaca* according to our dissections and to Lightoller (1928a), Seiler (1973, 1976) and Huber (1930a,b, 1931, 1933), designated it as a 'deep layer of the occipitalis' but it is not homologous to the 'pars profunda' found in *Pongo* by Sullivan & Osgood, 1925 and by us, to the 'pars profunda' described in *Pan* by Burrows et al. 2006; nor to the 'pars profunda' *sensu* Seiler, 1976; which corresponds to the 'occipitalis proprius' *sensu* the present work). Our dissections and the literature reviewed by us (for detailed accounts on this issue, e.g. Lightoller, 1928a, 1934; Seiler, 1976) confirm that the 'cervico-auriculo-occipitalis' is usually not present as a distinct structure in *Pongo*, *Gorilla*, *Pan* and *Homo*, although it was apparently present as a small 'vestigial' structure in a gorilla specimen reported by Ruge (1887b), and as a small and mainly tendinous structure in an orangutan reported by Sullivan & Osgood (1925; it seems to correspond to the small structure that was designated as 'nuchal/neck portion' of the occipitalis by these latter authors), and as a small structure in a chimpanzee illustrated by Seiler (1976: see his fig. 143). A gorilla specimen illustrated by Seiler (1976) seems to have a few fibers corresponding to the fibers of the 'cervico-auriculo-occipitalis' of other primates, but as they run superiorly and laterally, these fibers become deeply blended to the main body of the occipitalis, and do not really extend laterally to attach onto the ear, as usually does the 'cervico-auriculo-occipitalis' on hylobatids and non-hominoid primates (e.g. his fig. 148).

19. *Auricularis posterior is not a distinct muscle (L 1, AUTAPOMORPHY).* Contrary to taxa of CS-0 [**0**], in orangutans [**1**] the auricularis posterior is usually not present as a distinct, separate muscle. Sonntag (1924a), Lightoller (1928a), Seiler (1976) and Winkler (1989) stated that some orangutans have an 'auricularis posterior', but the descriptions and illustrations of these authors seem to indicate that this structure is actually deeply blended to the occipitalis (e.g. fig. 1 of Sonntag, 1924a), so it is not clear if these orangutans do have a distinct muscle auricularis posterior *sensu* the present work. According to Ruge(1887a,b), Sullivan & Osgood (1925), Huber (1930a,b, 1931), Lightoller (1928a) and Miller (1952), as well as to our dissections, the auricularis posterior is in fact not present as a distinct muscle in most *Pongo* specimens (for a recent review, see Diogo et al. 2009b).

20. *Mandibulo-auricularis is not a distinct muscle (L 2, CI 50, RI 83).* [**0**] Numerous non-primate mammals, including *Rattus* and *Tupaia*, as well as primates such as *Lemur, Propithecus, Nycticebus* and *Loris*, have a mandibulo-auricularis (the muscle is present in these taxa according to Lightoller, 1934; Hill, 1953; Seiler, 1975, 1976, 1980; and to our dissections). [**1**] In *Cynocephalus*, *Tarsius*, and the anthropoid primates included in this analysis there is usually no distinct, fleshy muscle mandibulo-auricularis (as reported by, e.g. Ruge, 1887a, 1911; Lightoller, 1928a, 1934; Huber, 1930a,b, 1931, 1933; Edgeworth, 1935; Raven, 1950; Jouffroy & Saban, 1971; Seiler, 1976, 1980; Pellatt, 1979a,b; Waller et al. 2006, 2008a,b; and corroborated by our dissections). Lightoller (1934) argued that, contrary to lemurs and *Tupaia* (in which the mandibulo-auricularis is a fleshy muscle), in taxa such as *Tarsius* and marmosets (which include the genus *Callithrix*) the mandibulo-auricularis probably corresponds to a strong fascial sheet connecting the posterior edge of the mandible to the bony external auditory meatus, which might well correspond to/be part of the stylomandibular ligament of modern humans. Huber (1931) concluded that the mandibulo-auricularis is missing in the marmoset *Callithrix* but, contrary to Lightoller (1934), he stated that the muscle is present in some *Tarsius* specimens. Edgeworth (1935) also stated that the mandibulo-auricularis is missing as a distinct muscle in the Platyrrhini and that in many mammals this muscle is innervated by a postauricular branch of nerve CN7, but suggested that in *Tarsius tarsier*, *Callithrix jacchus*, *Papio* sp., *Macaca nemestrina*, and *Pongo pygmaeus* it is innervated by a preauricular branch of this nerve. Edgeworth's statements are contradictory, because if the muscle is missing in New World monkeys, how can it be innervated by a preauricular branch of nerve CN7 in *Callithrix* and also in other taxa that do usually do not have the muscle, such as *Pongo*? Edgeworth's statements thus actually seem to support Lightoller's (1934) idea that the structures that are innervated by the preauricular branch of CN7 in these few anthropoids (e.g. the so-called 'erector auriculae' of *Tarsius*) are not homologous to the mandibulo-auricularis *sensu* the present work, which is a muscle that is innervated by a postauricular branch of CN7 and that is therefore seemingly only consistently found in strepsirrhines within extant primates. Jouffroy & Saban (1971) stated that the mandibulo-auricularis is present in all 'prosimians' (thus suggesting that this muscle is also present in *Tarsius*), being poorly developed in the Platyrrhini, and vestigial in some *Macaca*. Seiler (1974a) explained in his page 83 that the structure that he designated as 'auricularis inferior' corresponds to the 'stylo-auricularis'/'mandibulo-auricularis' of other authors, suggested that this structure is often neglected in hominoids and some other catarrhines, and described and illustrated this structure in specimens of *Pan troglodytes* and *Macaca mulatta* (as a small, mainly vestigial structure that is mainly connected to the ear and to the parotid fascia) and of *Homo sapiens* (mainly connected to

the ear, parotid fascia and/or mandible). However, in at least some of the latter taxa, the structure that Seiler is describing clearly seems to be a mainly ligamentous/fascial structure, and not a distinct, fleshy mandibulo-auricularis muscle *sensu* the present work. In fact, in all the *Tarsius* and anthropoid specimens dissected by us the mandibulo-auricularis is not present as a distinct, fleshy muscle, probably corresponding instead to a thick ligamentous/fascial structure that likely corresponds/is part of the stylomandibular ligament of modern humans, as proposed by Lightoller (1934). This is because this ligament usually runs from the ear region (mainly from the styloid process, not from the external acoustic meatus) to the posteroventral surface of the mandible, as often does the muscle mandibulo-auricularis of other primates. It should also be noted that the 'erector auriculae' reported by Burmeister (1846) in *Tarsius* probably corresponds to the zygomatico-auricularis, and not to the mandibulo-auricularis, *sensu* the present work (see above, as well as character below).

21. *Zygomatico-auricularis is a distinct muscle (L 1, AUTAPOMORPHY)*. Contrary to taxa of CS-0 [**0**], in *Tarsius* [**1**] the zygomatico-auricularis is present as a distinct muscle. Lightoller (1934) described a small muscle zygomatico-auricularis in the three *Tarsius tarsier* specimens dissected by him. He described it as running deep to the auriculo-orbitalis, from the ear to the zygomatic arch, and innervated by the temporofacial division of nerve VII. He stated that he did not found this muscle in any other primates, and that Woollard (1925) considered (as did Seiler, 1976; later) that the 'erector auriculae' muscle that Burmeister (1846) described in *Tarsius* might correspond to the mandibulo-auricularis, but that this homologization is 'not possible', because the former is supplied by the anterior auricular and the latter by the posterior auricular ramus of nerve VII. Lightoller (1934) thus decided to designate the 'erector auriculae' as zygomatico-mandibularis, as we do here. In fact, two other strong arguments support the idea that the zygomatico-auricularis is not homologous to the mandibulo-auricularis: (i) as their names indicate, the mandibulo-auricularis connects the ear to the mandible, while the zygomatico-auricularis connects the zygomatic arch to the ear, and, in all the cases described, never reaches the mandible; and (ii) as noted by Lightoller (1934), the mandibulo-auricularis is not present as a fleshy muscle in the *Tarsius tarsier* specimens dissected by him, corresponding instead, very likely, to a strong fascial sheet connecting the posterior edge of the mandible to the bony external auditory meatus (see character above). That is, these *Tarsius tarsier* specimens have both the small muscle that Lightoller (1934) designated as zygomatico-auricularis, and the strong fascial sheet that very likely corresponds to the mandibulo-auricularis, so the two muscles cannot be homologous. The zygomatico-auricularis probably does also not correspond to the 'auricularis inferior' described in primates such as *Macaca* by Waller et al. (2008b) and Burrows et al. (2009), because the zygomatico-auricularis: (i) clearly seems to derive from the auriculo-orbitalis, as noted by Lightoller (1934; actually, in modern human and veterinary anatomical atlases, the zygomatico-auricularis is usually considered as a bundle, or a synonym, of the auricularis anterior or of the auriculo-orbitalis); (ii) is one of the deepest facial muscles, while the 'auricularis inferior' described by Waller et al. (2008b) and Burrows et al. (2009) is a superficial muscle; and (iii) it was not found in *Macaca mulatta* by Lightoller (1928a) nor by us (nor in other primates such as *Pongo pygmaeus*, *Papio hamadryas*, *Callithrix jacchus* and *Eulemur macaco* by Lightoller, 1928a, 1934) which is precisely the *Macaca* species reported by Waller et al. (2008b) and Burrows et al. (2009). In fact, the superficial muscle 'auricularis inferior' reported by Waller et al. (2008b) and Burrows et al. (2009) in *Macaca mulatta* clearly seems to correspond to the depressor helicis of the specimen of this species that was illustrated in fig. 82 of Seiler (1976). A small 'zygomatico-auricularis' may be found in a few other mammals (e.g. horses), very likely due to an independent evolutionary differentiation of the auriculo-orbitalis or of the orbito-temporo-auricularis into a similar, but not really homologous (i.e. not derived from a same last common ancestor that already had this muscle), small muscle running from the ear to the zygoma (e.g. Jouffroy & Saban, 1971). Our dissections of *Tarsius* corroborated the descriptions of Lightoller (1934; i.e. the zygomatico-auricularis was present deep to the zygomaticus major and to the auriculo-orbitalis, connecting the ear to the zygomatic arch, and lying superiorly to the fascial tissue that is situated in the area occupied by the mandibulo-auricularis of other mammals; see character above). That is, our dissections strongly corroborate the idea that the zygomatico-auricularis of *Tarsius* is not homologous to the mandibulo-auricularis of other mammals.

22. *Risorius is a distinct muscle (L 1, CI 100, RI 100)*. As explained by Seiler (1976), and in the recent review of Diogo et al. (2009b), a few specimens of some of the genera listed as CS-0 (e.g. *Hylobates* and *Pongo*) [**0**] may have structures that are designated as 'risorius' in the literature, but at least some of these structures are clearly not homologous to each other, nor to the risorius muscle that is present in most modern humans. That is, within all the taxa included in this cladistic analysis, the only genera in which the risorius has been often described in the literature as a distinct muscle, and also the only genera in which we did found (in our dissections) a distinct muscle risorius such as that usually found in modern humans, are *Gorilla* and *Pan* [**1**]. Most of the authors that have described the facial muscles of gorillas did effectively report and/or illustrate a risorius (e.g. fig. 50 of Hartmann, 1886; fig. 1 of Ruge, 1887b; fig. 1 of Chudzinski, 1885; plate 9 of Raven, 1950; fig. 146 of Seiler, 1976; also reported by Ehlers, 1881; Deniker, 1885; Huber, 1930b, 1931; although this latter author stated that this was not a 'true' risorius). In both sides of the fresh adult gorilla dissected by us, we also found a risorius such as that shown in, e.g. plate 9 of Raven (1950), i.e. running superficially to the platysma myoides to attach onto the angle of the mouth. Such a muscle was also found in at least one side of the body of four of the seven chimpanzees dissected by us, and was reported and/or shown in other chimpanzees by various authors (e.g. illustrations of Virchow, 1915; Sonntag, 1923, 1924b; Burrows et al. 2006; see also descriptions of Hartmann, 1886; Seiler, 1976; Huber, 1930b, 1931). Seiler (1971d, 1976) suggested that a 'risorius' might be occasionally present in *Hylobates* and of *Pongo*, but, as explained above, at least some of the structures shown by this author in specimens of these genera clearly do not seem to be homologous to each other, nor to the risorius of *Homo*, *Pan* and *Gorilla*. In fact, at least to our knowledge all the other authors that have studied in detail the facial muscles of *Hylobates* and *Pongo* did not found a distinct muscle risorius in any specimens of these two genera; moreover, we did not also found this muscle in any of the hylobatid and *Pongo* specimens dissected by us. Therefore, even if some of the structures described in these two taxa by Seiler (1971d, 1976) are actually homologous to the risorius of *Homo*, *Gorilla* and *Pan*, the fact is that, contrarily to what happens in these latter genera, the

presence of a risorius would, anyway nevertheless still represent an extremely rare condition within Asian apes.

23. *Sphincter colli superficialis is not a distinct muscle (L 1, CI 100, RI 100)*. Numerous non-primate mammals, including *Rattus* and *Tupaia*, have a sphincter colli superficialis [**0**], but in *Cynocephalus* (Diogo, 2009) and the primates included in this cladistic analysis [**1**] the sphincter colli superficialis is usually not present as a distinct muscle (e.g. Ruge, 1887a, 1911; Huber, 1930a,b, 1931, 1933; Edgeworth, 1935; Saban, 1968; Jouffroy & Saban, 1971; Swindler & Wood, 1973; Seiler 1970, 1971a,b,c,d,e, 1973, 1974a,b, 1975, 1976, 1977, 1979a,b, 1980; Pellatt, 1979a,b; our dissections; for a recent review, see Diogo et al. 2009b). It should be noted that the 'sphincter colli' described by Burrows et al. (2006) in chimpanzees could in theory correspond to the sphincter colli superficialis *sensu* the present work, because they stated that this structure is superficial to the platysma myoides. However, the sphincter colli superficialis is not present as a distinct muscle in all the other *Pan* specimens described in the literature and dissected by us and, as explained above, is actually usually missing in all extant primate taxa. Moreover, A. M. Burrows (personal communication) corroborated that the muscle described in Burrows et al. (2006) probably does not correspond to a sphincter colli superficialis (nor to a sphincter colli profundus, because it was described as passing mainly superficially, and not deep, to the platysma myoides). Therefore, *Pan* is coded as CS-1 (and is also coded CS-1 in the character below).

24. *Sphincter colli profundus is not a distinct muscle (L 4, CI 25, RI 66)*. Numerous non-primate mammals, including *Rattus*, *Cynocephalus* and *Tupaia*, as well as primates such as *Lemur, Loris, Nycticebus, Tarsius, Callithrix, Aotus*, *Saimiri* and *Cercopithecus*, usually have a sphincter colli profundus (e.g. Ruge, 1885, 1887a; Schreiber, 1928; Huber, 1930b, 1931; Lightoller, 1934; Edgeworth, 1935; Hill, 1953, 1957, 1966; Saban, 1968; Seiler, 1976; our dissections) [**0**]. Immel (1997) suggested that this muscle was missing in one *Aotus* specimen, but it is possible the muscle was present and that Immel failed to detect it, because in this taxon the muscle is particularly thin (and, as in most other primates, lies just medial, and is closely connected, to the platysma cervicale and platysma myoides, being often effectively difficult to detect). In our *Cercopithecus diana* GWUANT CD1 specimen the sphincter colli profundus was seemingly missing. However, Seiler (1976) stated that the sphincter colli profundus is inconstantly present in *Cercopithecus mona* and the closely related *Chlorocebus aethiops* (e.g. his figs 113 and 121). As this muscle was also described and illustrated by Hill (1966) in another species of *Cercopithecus* (*Cercopithecus ascanius*), it seems to be often present in species of *Cercopithecus*; therefore, this genus is coded as CS-0. Huber (1930a, 1931), Lightoller (1934), Hill (1955), and Saban (1968) stated that some *Tarsius* specimens might have a 'vestigial' sphincter colli profundus. However, at least some of these authors actually seem to be referring to other structures such as the 'depressor helicis' (which, in at least some cases, probably corresponds to the zygomatico-auricularis *sensu* the present work: see depressor helicis above) or the 'depressor palpebrae inferioris', and not to the sphincter colli profundus *sensu* the present work. Woollard (1925) and Jouffroy & Saban (1971) suggested that *Tarsius* has no sphincter colli profundus, but this seems to be an error. It is likely that some authors did not detect the muscle because, as explained above, it is very thin and lies just medial, and is closely connected to, the platysma cervicale and platysma myoides. In fact, in the most detailed published analysis of this subject, Lightoller (1934) did find a sphincter colli profundus *sensu* the present work in all the three *Tarsius tarsier* specimens dissected by him (e.g. his figs 28–33), and we also found this muscle in *Tarsius syrichta.* Seiler (1976) also reported this muscle in *Tarsius tarsier* and *Tarsius bancanus*, corroborating the idea that this muscle is effectively usually present in *Tarsius*, which is thus coded as CS-0. [**1**] In *Propithecus* (e.g. Lightoller, 1928a; Jouffroy & Saban, 1971; our dissections) and *Pithecia* (e.g. Schreiber, 1928; Saban, 1968; Seiler, 1976; our dissections), as well as in *Macaca*, *Papio*, *Colobus* and hominoids the sphincter colli profundus is usually not present as a distinct muscle (e.g. Ruge, 1887a, 1911; Lightoller, 1928a; Huber, 1930a,b, 1931, 1933; Edgeworth, 1935; Saban, 1968; Jouffroy & Saban, 1971; Swindler & Wood, 1973; Seiler, 1976; Pellatt, 1979a,b; our dissections; see character above and, for a recent review, see Diogo et al. 2009b).

25. *Sternofacialis is not a distinct muscle (L 1, CI 100, RI 100)*. Various non-primate mammals (e.g. Peterka, 1936; Jouffroy & Saban, 1971), including *Rattus* (e.g. Greene, 1935; Diogo et al. 2008b, 2009b), have a sternofacialis [**0**], but in *Tupaia*, *Cynocephalus*, and the primates included in this cladistic analysis [**1**] the sternofacialis is usually not present as a distinct muscle (for a recent review, see Diogo, 2009; Diogo et al. 2009b).

26. *Interscutularis is not a distinct muscle (L 1, CI 100, RI 100)*. Various non-primate mammals (e.g. Peterka, 1936; Jouffroy & Saban, 1971), including *Rattus* (e.g. Greene, 1935; Diogo et al. 2008b, 2009b), have an interscutularis [**0**], but in *Tupaia*, *Cynocephalus*, and the primates included in this cladistic analysis [**1**] the interscutularis is usually not present as a distinct muscle (for a recent review, see Diogo, 2009 and Diogo et al. 2009b).

27. *'Zygomaticus' is the only well developed zygomatic muscle in the cheek region (L 1, CI 100, RI 100)*. It should be noted that Seiler (1976) followed the hypothesis defended by Loth (1931) and considered that both the zygomaticus major and zygomaticus minor of catarrhines such as modern humans derived from the 'auriculolabialis superior' of mammals such as tree-shrews (which he designated as 'zygomaticus'), and not respectively from the 'auriculolabialis inferior' and 'auriculolabialis superior' of these mammals, as defended in Diogo et al. (2008b, 2009b), and in the present work. This is because, according to Seiler, New World monkeys represent a 'transitory stage' in which the 'auriculolabialis inferior' is often only present as a reduced/vestigial structure but is not completely lacking as is usually the case in catarrhines, while the 'auriculolabialis superior' (which Seiler considered to correspond to the 'zygomaticus' of New World monkeys) is not 'yet' differentiated into a zygomaticus major and zygomaticus minor, as is usually the case in catarrhines (e.g. his fig. 50; compare with, e.g. his fig. 74). Some authors (e.g. Schreiber, 1928) consider that the small, thin muscle that is attached to the inferior portion of the ear in taxa such as *Pithecia* and *Saimiri* is homologous to the 'auriculolabialis inferior' of non-anthropoid primates. However, Seiler (1976) uses the names 'tragicus' and 'depressor helicis', respectively, to designate this small, thin muscle in these taxa, and our dissections of specimens of these genera indicate this structure is likely a small muscle of the ear (e.g. Seiler, 1976's figs 50 and 62). But our observations and comparisons reveal that in some New World monkeys there is effectively a well-developed 'auriculolabialis inferior' such as that found in non-anthropoid taxa, running from the ear to the angle of the mouth (this muscle is designated as 'auriculolabialis' in, e.g. figs 55 and 66 of Seiler, 1976). Seiler's hypothesis has also been contradicted in the past by Lightoller (1934), who defended the idea that the 'zygomaticus'

of New World monkeys such as *Callithrix* corresponds to the 'auriculolabialis inferior' plus the 'auriculolabialis superior' of non-anthropoid taxa (e.g. page 275 of Lightoller, 1934). The latter idea was corroborated by our dissections of *Saimiri*, *Callithrix*, *Aotus* and *Pithecia*. It was also corroborated by our dissections of catarrhines such as *Colobus*, in which the zygomaticus major almost reaches the ear posteriorly and strongly resembles the 'auriculolabialis inferior' of other mammals. One alternative, but less likely hypothesis, would be that the 'zygomaticus' of New World monkeys such as *Callithrix* corresponds to the 'auriculolabialis superior', as suggested by Seiler (1976), but that, contrary to the hypothesis defended by Seiler, the LCA of anthropoids had a well-developed 'auriculolabialis inferior', which formed the zygomaticus major of catarrhines and simply became secondarily reduced in some (not all: see above) the New World monkeys (because not all the significant anatomical transitions have necessarily to occur in the lineages leading to catarrhines and then to modern humans, they obviously can also occur in other lineages). Be that as it may, what is clear, and relevant for this cladistic analysis, is that the extant New World monkeys, including *Callithrix, Aotus, Saimiri* and *Pithecia* [**1**], usually have a derived condition that is not found in other extant primates [**0**]: they only have a well developed 'zygomaticus' muscle in the cheek region (e.g. figs 47 of Seiler, 1976), and not two, as is the case in the non-anthropoid taxa included in this analysis (, i.e. the 'auriculolabialis inferior' and 'auriculolabialis superior', which very likely correspond respectively to the zygomaticus major and zygomaticus minor *sensu* the present work: see characters below) and in catarrhines (i.e. the zygomaticus major and zygomaticus minor).

28. *Anterior portion of zygomaticus major passes partially or completely deep to the levator anguli oris facialis (L 2, CI 50, RI 66)*. In taxa of CS-0 the anterior portion (i.e. the portion attaching on the angle of the mouth) of the zygomaticus major (often named 'auriculolabialis inferior' in non-anthropoid taxa) or of the lower part of the 'zygomaticus' (in New World monkeys) is superficial to the levator anguli oris facialis [**0**]. However, in *Cercopithecus*, *Macaca*, *Papio* and *Hylobates* [**1**] it usually passes at least partially deep to this latter muscle. Regarding *Macaca*, the anterior portion of the zygomaticus major passes partially or completely deep to the levator anguli oris facialis in 93% of the 60 cases (each case corresponding to one side of the head) reported by Shibata (1959), as well as in the specimens dissected by Lightoller (1928a), by us, and seemingly by Burrows et al. (2009; because at least part of the structure that is designated as LAO in their fig. 2 clearly seems to correspond to the levator anguli oris facialis *sensu* the present work: compare that figure with fig. 4 of Diogo et al. 2009b). Concerning *Papio* and *Cercopithecus*, the anterior portion of the zygomaticus major usually passes mainly deep to the levator anguli oris facialis, as described and illustrated by Lightoller (1928a), Hill (1966), Seiler (1970), Seiler (1971c,d, 1976), Swindler & Wood (1973) and Pellatt (1979a,b) and corroborated by our dissections, although Hill (1970) stated that in *Papio cynocephalus* this latter muscle is completely deep to zygomaticus major and zygomaticus minor (e.g. Fig., 26 of Hill, 1970). Regarding *Hylobates*, the anterior portion of the zygomaticus major passes partially deep to the levator anguli oris facialis in the specimens illustrated by Ruge (1911), Huber (1930b, 1931), and Edgeworth (1935), and dissected by us (e.g. figs 5, 6 and 7 of Ruge, 1911; fig. 6 of Diogo et al. 2009b).

29. *Zygomaticus major is almost completely covered by the platysma myoides and/or the platysma cervicale (L 1, AUTAPOMORPHY)*. [**0**] In most non-primate mammals in which the zygomaticus major (or 'auriculolabialis inferior') is present (e.g. Jouffroy & Saban, 1971), including *Rattus* and *Cynocephalus*, as well as in most primates, this muscle (or the lower portion of the 'zygomaticus' in New World monkeys) and the platysma (myoides and/or cervicale) essentially lie at the same level (in a transversal plane: e.g. when the two muscles are blended, as for instance in *Rattus* and some primates, e.g. fig. 3 of Lightoller, 1934) or the former is partially/completely superficial to the latter (as for instance in *Cynocephalus*, e.g. fig. 1 of Diogo, 2009), or, also often, the former lies mainly superiorly to the latter (i.e. they do not really overlap: e.g. in numerous anthropoids, including modern humans, e.g. plate 26 of Netter, 2006). Therefore, in some taxa of CS-0 a small portion of the zygomaticus major (e.g. its anterior attachment onto the region of the angle of the mouth) may be partially covered by the platysma in lateral view. However, within all the taxa are included in this cladistic analysis and dissected by us, only in *Tupaia* (e.g. figs 1 and 10 of Lightoller, 1934) [**1**] is the zygomaticus major usually almost completely covered by the platysma myoides and/or the platysma cervicale in lateral view (reported in *Tupaia*, and other tree-shrews such as *Ptilocercus* by Le Gros Clark, 1924, 1926; Lightoller, 1934; Seiler, 1976; and corroborated by our dissections in *Tupaia*). In 37% of the 60 sides of *Macaca cyclopis* dissected by Shibata (1959) the zygomaticus major was completely covered by the 'platysma', so this was not the common condition see in those 60 dissections, as it is also not the case in members of other *Macaca* species: therefore, this genus is coded as CS-0 (e.g. Huber, 1930b, 1931, 1933; Waller et al. 2008b; Burrows et al. 2009; Diogo et al. 2009b). It should be noted that the descriptions and/or illustrations of Woollard (1925) and Lightoller (1934) suggested that in *Tarsius* the zygomaticus major is almost completely covered by the platysma cervicale. However, in the *Tarsius syrichta* specimen dissected by us the zygomaticus major and platysma cervicale seemed to lie at about the same level and a substantial portion of the former muscle was visible in a lateral view of the head. As this latter condition was also found in, at least, some of the *Tarsius bancanus* specimens dissected by Seiler (1976: e.g. his fig. 36), until more information is available for this genus we prefer to code *Tarsius* as '?'.

30. *Zygomaticus minor is directly originated from the ear (L 5, CI 20, RI 42)*. [**0**] As explained by Jouffroy & Saban (1971), within the mammalian taxa that have a zygomaticus minor, the plesiomorphic condition, found in numerous non-primate mammals including *Rattus* and *Cynocephalus* and in various primates, is that this muscle ('auriculolabialis superior' in non-anthropoid taxa) or the upper portion of the 'zygomaticus' (in New World monkeys) usually mainly originates from the zygomatic arch and/or the orbital region, but not directly from the ear (it should be noted that in some of the taxa of CS-0, as for instance *Cynocephalus*, the muscle almost reaches the ear, but is not directly attached to it: e.g. fig. 1 of Diogo, 2009). [**1**] Within all the taxa included in this cladistic analysis, only in *Tupaia, Aotus, Callithrix, Propithecus, Lemur, Nycticebus, Loris* and *Tarsius* (e.g. figs 1 and 10 of Lightoller, 1934; figs 26 and 38 of Seiler, 1976) does a significant portion of the zygomaticus minor (or of the upper portion of the 'zygomaticus', in New World monkeys) directly originate from the ear (that is why in non-anthropoid primates and in *Tupaia* this muscle is often named 'auriculolabialis superior'). Such a direct attachment was reported in *Tarsius*, *Tupaia*, *Propithecus*, and other tree-shrews such as *Ptilocercus*

by Le Gros Clark (1924), Woollard (1925), Lightoller (1934), Hill (1955), Seiler (1976), and corroborated by our dissections of *Tupaia, Propithecus* and *Tarsius*, as well as of *Lemur*. A connection between the upper portion of the zygomaticus of New World monkeys (this muscle probably includes the zygomaticus major and zygomaticus minor *sensu* the present work: see above) and the ear was also found by Huber (1930b, 1931), Seiler (1976) and by us in *Aotus*. Seiler (1976) suggested that in *Callithrix jacchus* there is usually no origin of the zygomaticus from the ear, but we did found such an origin from the ear in this species. An origin from the ear was also found by Beattie (1927) in 14 specimens of this latter species, and it is also illustrated in other specimens of this species by Burrows (2008: e.g. her fig. 5B) and Lightoller (1934: e.g. his fig. 23). Therefore, *Callithrix* and *Aotus* (but not *Saimiri* and *Pithecia*) are coded as CS-1. As reported by Schreiber (1928) and Seiler (1976) we did not found an origin from the ear in *Saimiri* and *Pithecia*, so these two taxa are coded as CS-0. It should be noted that in the drawings of *Loris* and *Nycticebus* provided by Hill (1953) and Seiler (1975, 1976), these authors do not show the posterior fibers of the zygomaticus minor reaching the ear; however, in all the *Loris* and *Nycticebus* specimens dissected by us there was clearly a direct attachment of the zygomaticus minor onto the ear, as is usually the case in other strepsirrhines, so these two genera are coded as CS-1.

31. *Zygomaticus major is not directly originated from the ear (L 1, CI 100, RI 100)*. [**0**] Although in some of the non-mammalian taxa that have a zygomaticus major this muscle is not attached to the ear, the plesiomorphic condition within the taxa included in this cladistic analysis is that this muscle is usually directly attached to the ear (e.g. fig. 1 of Diogo, 2009). This is the case in rodents such as *Rattus*, in flying lemurs and in tree-shrews such as *Tupaia*, and in primates as, e.g. *Lemur, Propithecus, Loris, Nycticebus* and *Tarsius* (that is why in these taxa this muscle is often named 'auriculolabialis inferior'; Le Gros Clark, 1924, 1926; Woollard, 1925; Lightoller, 1934; Greene, 1935; Hill, 1955; Seiler, 1975, 1976; Diogo, 2009; our dissections; see also character above). [**1**] As reported in the literature, and corroborated by our dissections, in *Saimiri* and *Pithecia*, as well as in *Cercopithecus*, *Macaca*, *Colobus*, *Papio* and hominoids, the zygomaticus major, or the lower portion of the zygomaticus in New World monkeys, usually mainly originates from the zygomatic arch and/or surrounding regions, but not directly from the ear (it should be noted that in some of the genera of CS-1 the zygomaticus major almost reaches the ear, and that in a few specimens of these genera, for instance in a few modern humans and a few chimpanzees – e.g. Waller et al. 2006 – some of its fibers may actually reach the ear, but this represents a variant/anomaly, and not the usual condition, within these genera). [**-**] Inapplicable in *Aotus* and *Callithrix*, because their muscle zygomaticus does reach the ear but these two taxa were already coded for that feature in the character above (within all the anthropoids included in this cladistic analysis, they are the only two genera in which there is a direct attachment onto the ear, and coding them together again in the present character would thus mean to code them together twice, although this clearly refers to a single feature, i.e. having the zygomaticus muscle attached onto the ear).

32. *Frontalis is a distinct muscle (L 2, CI 50, RI 50)*. Contrary to the plesiomorphic condition found in numerous other mammals, including monotremes and, within the taxa examined here, *Rattus* and *Saimiri* [**0**], in *Tupaia*, *Cynocephalus* and all other primate taxa included in this cladistic analysis [**1**] the frontalis is usually present as a distinct muscle (for a recent review, see Diogo, 2009; Diogo et al. 2008b, 2009b). As noted in the detailed work of Lightoller (1928a), in *Papio* the most lateral fibers of the auriculo-orbitalis and the most inferior fibers of the frontalis run in the same direction, and thus the former are often mistaken for the latter. This mistake was made by Pellatt (1979a,b) and Swindler & Wood (1973), who suggested (erroneously) that the auriculo-orbitalis is usually not present as a distinct muscle in *Papio*. Similarly, Pellatt (1979a,b) and Swindler & Wood (1973) suggested the procerus is usually also not differentiated in *Papio*. We could not find a procerus in our specimen GWUANTH PA1, but this muscle was clearly described, and illustrated, in *Papio ursinus* and *Papio hamadryas* by Lightoller (1928a) and Seiler (1971c: e.g. his fig. 2614). The frontalis thus seems to be usually present in *Papio*, and this genus is thus coded as CS-1. As described and illustrated by Seiler (1976), in *Saimiri* the frontalis is usually not present as a distinct muscle, i.e. it is not differentiated from the anlage that forms the auriculo-orbitalis, these structures being deeply blended to form a continuous muscle orbito-temporo-auricularis (e.g. fig. 62 of Seiler, 1976). *Saimiri* is thus coded as CS-0.

33. *Auricularis superior is a distinct muscle (L 1, CI 100, RI 100)*. Contrary to the plesiomorphic condition found in numerous other mammals, including monotremes and, within the taxa examined here, *Rattus* [**0**], in *Tupaia*, *Cynocephalus* and all primates included in this cladistic analysis [**1**] the auricularis superior is usually present as a distinct muscle (for a recent review, see Diogo, 2009; Diogo et al. 2008b, 2009b).

34. *Zygomatico-orbicularis is a distinct muscle (L 2, CI 50, RI 0)*. Contrary to the plesiomorphic condition found in numerous mammals, including monotremes and all the other taxa included in this cladistic analysis [**0**], in *Tupaia* and *Cynocephalus* [**1**] the zygomatico-orbicularis is usually present as a distinct muscle (for a recent review, see Diogo, 2009; Diogo et al. 2008b, 2009b).

35. *Depressor supercilii is a distinct muscle (L 1, CI 100, RI 100)*. Contrary to the plesiomorphic condition found in numerous mammals, including monotremes and, within the taxa examined here, *Rattus*, *Tupaia* and *Cynocephalus* [**0**], in all primate taxa included in this cladistic analysis [**1**] the depressor supercilii is usually present as a distinct muscle (for a recent review, see Diogo, 2009; Diogo et al. 2008b, 2009b).

36. *Corrugator supercilii is a distinct muscle (L 1, CI 100, RI 100)*. Contrary to the plesiomorphic condition found in numerous other mammals, including monotremes and, within the taxa examined here, *Rattus* [**0**], in *Tupaia*, *Cynocephalus* and all primate taxa included in this cladistic analysis (except *Saimiri*, which is coded as '?') [**1**] the corrugator supercilii is usually present as a distinct muscle (for a recent review, see Diogo, 2009; Diogo et al. 2008b, 2009b).

37. *Levator labii superioris runs mainly superoinferiorly from the region below the eye to the upper lip (L 2, CI 50, RI 85)*. [**0**] As noted by Lightoller (1928a), Huber (1930b, 1931), Edgeworth (1935), Seiler (1970) and Jouffroy & Saban (1971) and corroborated by our dissections, in all the non-catarrhine taxa included in this analysis, but also in *Hylobates*, the levator labii superioris is not as markedly vertical (superoinferiorly directed) as is the case in taxa of CS-1: it mainly runs, instead, posteroanteriorly and lateromedially from the infraorbital region to the nose. In *Hylobates* the muscle is clearly more horizontal than in other

extant catarrhines, its configuration and attachments being strikingly similar to those found in non-catarrhine taxa (e.g. fig. 1 of plate 27 of Deniker, 1885; fig. 5 of Ruge, 1911; fig. 33 of Huber, 1930b; fig. 8 of Huber, 1931; table 2 of Seiler, 1970; fig. 5224 of Seiler, 1971d; fig. 7 of Diogo et al. 2009b). [**1**] In all the non-hylobatid catarrhine taxa included in this cladistic analysis the levator labii superioris runs mainly superoinferiorly from the infraorbital region to the upper lip, being less connected to the nose. It should be noted that Lightoller (1934) stated that the 'levator labii superioris', or 'infra-orbito-labialis'/'caput infraorbitale' is present as a distinct muscle in *Tarsius*, and that this is a case in which *Tarsius* is more similar to anthropoids such as Old World monkeys and hominoids than to strepsirrhines. This is because, according to him, in *Tarsius* this 'levator labii superioris' runs mainly vertically (superoinferiorly) from the nasal process of the maxilla and the infraorbital margin to the upper lip (and not to the nose), passing mainly deep to the 'maxillo-naso-labialis' and mainly superficial to the levator anguli oris facialis (labels 27, 9 and 22 of his plate 3). However, the descriptions of *Tarsius* provided by Woollard (1925) and Seiler (1976), as well as our own dissections, suggest that the structure that Lightoller (1934) designated as 'levator labii superioris' in this taxon probably corresponds to part of the orbicularis oculi *sensu* the present work (e.g. figs 35 and 36 of Seiler, 1976; compare with plate 3 of Lightoller, 1939). Actually, in fig. 13 of plate 3 of Lightoller (1934), the structure labeled '9' (his 'levator labii superioris' or 'caput infraorbitale') does seem to be similar to/part of the structure labeled '5', which he effectively designated as orbicularis oculi. The 'levator labii superioris' *sensu* Lightoller (1934) thus probably corresponds to part of the orbicularis oris *sensu* the present work, while the 'maxillo-naso-labialis' and the 'naso-labialis' *sensu* Lightoller (1934) correspond respectively to the levator labii superioris and to the levator labii superioris alaeque nasi *sensu* Seiler (1976) and *sensu* the present work. According to Lightoller (1934), in *Tarsius* the 'maxillo-naso-labialis' (levator labii superioris *sensu* the present work) is well-developed and runs from the alveolar margin to the region of the nose although some fibers also attach onto the upper lip; its orientation changes from a vertical to a horizontal direction, in which the anterior fibers become craniad and the posterior fibers become ventral, and the muscle passes from a deep to a more superficial position. The true levator labii superioris of *Tarsius* thus runs mainly postero-anteriorly, to attach mostly onto the nose, as it does in other non-catarrhine taxa included in this cladistic analysis; *Tarsius* is thus coded as CS-0.

38. *Depressor septi nasi is a distinct muscle (L 1, CI 100, RI 100)*. Contrary to the plesiomorphic condition found in numerous other mammals, including monotremes and various primates [**0**], in *Macaca* and hominoids [**1**] the depressor septi nasi is usually present as a distinct muscle (for a recent review, see Diogo, 2009; Diogo et al. 2008b, 2009b). The depressor septi nasi was described and illustrated by Seiler (1970), Seiler (1971c, 1976) in *Cercopithecus*, *Colobus* and *Papio* and our dissections corroborated that this muscle is effectively present in at least *Cercopithecus* and *Colobus*, so these three genera are also coded as CS-1.

39. *Depressor anguli oris is a distinct muscle (L 2, CI 50, RI 88)*. Contrary to the plesiomorphic condition found in numerous other mammals, including monotremes, as well as in various primates [**0**], in *Macaca* and hominoids [**1**] the depressor anguli oris is usually present as a distinct muscle (for a recent review, see Diogo, 2009; Diogo et al. 2008b, 2009b). The depressor anguli oris is also present as a distinct muscle in *Aotus*, *Pithecia* and *Saimiri* (e.g. Huber, 1930b, 1931 stated that the muscle is present in *Pithecia* and *Saimiri*, but not in *Aotus*; however, Schreiber, 1928 and Seiler, 1976 clearly described, and illustrated, this muscle in all these three genera, and this was corroborated by our dissections), as well as in *Papio, Colobus* and *Cercopithecus*. Regarding *Papio*, Lightoller (1928a) stated that this muscle is poorly differentiated in *Papio hamadryas*, but Swindler & Wood (1973) did find a well-developed depressor anguli oris in *Papio anubis*, and the 'incisivus inferior' reported by Pellatt (1979a,b) in *Papio ursinus* clearly seems to include at least part of the depressor anguli oris *sensu* the present work (compare, e.g. figs 4 and 5 of Pellatt, 1979a,b with plate 31 of Swindler & Wood, 1973). The depressor anguli oris is also present in *Cercopithecus* and *Colobus*, as shown by Hill (1966) and Seiler (1970), Seiler (1971c,d, 1976), corresponding to part of the 'caninus' or of the 'triangularis' *sensu* these authors. We did find a distinct depressor anguli oris in the *Papio*, *Cercopithecus* and *Colobus* specimens dissected by us. It should be noted that Burrows (2008) has shown a 'depressor anguli oris' in *Callithrix jacchus* (her fig. 5B). However, in this case none of the various authors that have dissected specimens of this species has reported or illustrated this muscle (e.g. Beattie, 1927; Huber, 1930b, 1931; Lightoller, 1934; Seiler, 1976), and we also did not find this muscle in our dissections of *C. jacchus*; therefore, *Callithrix* is coded as CS-0.

40. *Mentalis is not a distinct muscle (L 1, AUTAPOMORPHY)*. Contrary to all the other taxa included in this cladistic analysis, as well as to numerous other therian mammals and also to monotremes [**0**], in *Rattus* [**1**] the mentalis is usually not present as a distinct muscle (for a recent review, see Diogo, 2009; Diogo et al. 2008b, 2009b).

Branchial muscles

41. *Stylopharyngeus originates from the stylomandibular ligament (L 1, CI 100, RI 100)*. In taxa of CS-0 [**0**] the stylopharyngeus usually originates from the cranium and from ligamentous, cartilaginous or ossified structures of the hyoid apparatus such as the stylohyal ligament. However, in the *Callithrix* and *Saimiri* specimens dissected by us [**1**] a substantial part of the stylopharyngeus is originated from the stylomandibular ligament instead (which usually runs from the region near the external auditory meatus to the back of the mandible). *Pithecia* is coded as '?' due to the lack of information in the literature (we could not discern this feature in the dissected specimens of this taxon).

42. *Ceratohyoideus is not a distinct muscle (L 1, CI 50, RI 80)*. Contrary to taxa of CS-0 [**0**], in hominoids and *Colobus* [**1**] the ceratohyoideus is usually not present as a distinct muscle. The ceratohyoideus is found in *Rattus*, *Tupaia* and *Cynocephalus* according to Sprague (1943, 1944a), House (1953), Saban (1968), Diogo et al. (2008b), Diogo (2009) and Gunnell & Simmons (2005) and to our dissections, and in *Lemur*, *Propithecus*, *Tarsius*, *Aotus*, *Callithrix*, *Pithecia, Saimiri*, *Macaca* and *Cercopithecus* according to Lampert (1926), Edgeworth (1935), Sprague (1944b), Starck & Schneider (1960) and to our observations. As described by various authors and corroborated by our dissections, the muscle is usually missing in extant hominoids and, according to our observations, it is also missing in *Colobus*). *Loris, Nycticebus* and *Papio* are coded as '?' due to the lack of information in the literature (we could not discern if the muscle was present or not in the dissected specimens of these taxa).

43. *Spinotrapezius is not a distinct muscle (L 2, CI 50, RI 50)*. Contrary to numerous mammals, including monotremes and, within the taxa included in this analysis, also in rodents such as *Rattus* and in *Tarsius* [**0**], in *Cynocephalus*, *Tupaia*, and all non-tarsoid primates included in this analysis [**1**] the spinotrapezius is not present as a distinct muscle (i.e. there is a single, continuous muscle trapezius). As explained by Diogo et al. (2008b), in *Cynocephalus* the trapezius can be somewhat differentiated into a 'caput spinotrapezius' and a 'caput acromiotrapezius'. But, as noted by Macalister (1872), Leche (1886) and Gunnell & Simmons (2005), and corroborated by our dissections, these two structures form a single muscle trapezius (e.g. fig. 8 of Leche, 1886) such as that found in *Tupaia* (e.g. fig. 5 of Kladetsky & Kobold, 1966) and all the non-tarsoid primates included in this study, in which the trapezius is often also somewhat divided into different heads (e.g. pars ascendens, pars transversa and pars descendens in modern humans). That is, in *Cynocephalus* the spinotrapezius is not present as a distinct muscle that is well differentiated and often separated from the acromiotrapezius, as is the case in taxa such as *Rattus* and in numerous other non-primate mammals. *Tarsius* usually has a distinct muscle that is well-differentiated and widely separated from the main body of the trapezius, and which is designated as 'depressor scapulae' in the literature (e.g. fig. 2 of Schultz, 1984) and corresponds to the spinotrapezius of rats and other mammals, as noted by Hill (1955) and Niemitz et al. (1984). Therefore, *Tarsius* is coded as CS-0. It should be noted that in some New World monkeys the posterior part of the trapezius is sometimes more differentiated from the rest of the trapezius (i.e. from the pars acromialis *sensu* the present work) than is usually the case in other non-tarsoid primates. This occurs, for instance, in at least some specimens of *Callithrix* (e.g. Beattie, 1927), *Brachyteles* (e.g. Hill, 1959, 1960, 1962), *Tamarin* (e.g. Hill, 1957) and *Pithecia* (e.g. Hill, 1960; fig. 4; but seemingly not in New World monkeys such as *Callimico* – e.g. Hill, 1959 and *Alouatta* – e.g. Schön, 1968 and Grand, 1968). However, contrary to *Tarsius*, in these latter specimens there is no distinct, separate muscle 'depressor scapulae' (e.g. Ziemer, 1972). In all the New World monkeys dissected by us, the trapezius was a fleshy and mainly continuous muscle, i.e. there was no distinct, separate spinotrapezius muscle.

44. *Cleido-occipitalis is not a distinct muscle (L 1, CI 100, RI 100)*. [**0**] In numerous non-primate mammals (e.g. Jouffroy, 1971), including *Rattus* and *Tupaia* (e.g. Le Gros Clark, 1924; Greene, 1935; Diogo et al. 2008b; Diogo, 2009) the cleido-occipitalis is usually present as a distinct muscle (the structure that is often designated as 'clavotrapezius' in rats clearly seems to be homologous to the cleido-occipitalis of mammals such as *Tupaia*, as noted by Jouffroy, 1971; and corroborated by our own dissections: for a recent review, see Diogo et al. 2008b). [**1**] In *Cynocephalus* (e.g. Leche, 1886; Jouffroy, 1971; Diogo, 2009), as well as in all primates included in this cladistic analysis, the cleido-occipitalis is usually not present as a distinct muscle. That is, in some specimens of genera of CS-1, including *Lemur*, *Macaca, Pan*, *Pongo* and modern humans (e.g. Wood, 1870; Schück, 1913a,b; Loth, 1931; Howell & Straus, 1933; Jouffroy, 1962, 1971; Mustafa, 2006), there is a structure that is sometimes designated as 'cleido-occipitalis', but this structure is deeply blended with the sternocleidomastoideus, and does not form a distinct, separate muscle (i.e. it is instead a bundle of the sternocleidomastoideus, which is designated in the present work as caput 'cleido-occipitale'). Moreover, at least in *Pan*, *Pongo* and modern humans, this structure is actually only found as an anomaly/variant, thus not representing the common condition for these taxa (according to Wood, 1870; and to the recent work of Mustafa, 2006, only about 36% and 33% of modern humans have a caput 'cleido-occipitale' of the sternocleidomastoideus, respectively). In fact, within all the non-human primates dissected by us, we only found a caput 'cleido-occipitale' of the sternocleidomastoideus on the left side of one infant chimpanzee (PFA 1077).

45. *Trapezius inserts onto the clavicle (L 3, CI 33, RI 66)*. [**0**] In numerous non-primate mammals (e.g. Jouffroy, 1971), including *Rattus*, *Tupaia* and *Cynocephalus*, the trapezius (or acromiotrapezius plus spinotrapezius, when both are present as distinct muscles) usually does not attach to the clavicle (e.g. Macalister, 1872; Leche, 1886; Le Gros Clark, 1924; Greene, 1935; George, 1977; Diogo, 2009; our dissections). It should be noted that (i) Ashton & Oxnard (1963) stated that in *Tupaia* the trapezius inserts onto the clavicle, but in all the specimens of this genus dissected by Le Gros Clark (1924), Jouffroy (1962, 1971), George (1977), and by us, the muscle has no such attachment (see also general comments below about Ashton & Oxnard's 1963 study); and (ii) the structure that is often designated as 'clavotrapezius' in rats, which attaches onto the clavicle, clearly seems to be homologous to the cleido-occipitalis of mammals such as *Tupaia* (see character above). Within primates, the trapezius (or acromiotrapezius plus spinotrapezius, when both are present as distinct muscles) is usually not attached onto the clavicle in *Lemur*, *Tarsius* and *Callithrix* (corroborated in *Tarsius* by, for example, Burmeister, 1846; Allen, 1897; Woollard, 1925; Schultz, 1984; and by us; and in *Callithrix* by Beattie, 1927; Ashton & Oxnard, 1963; and by us). Ashton & Oxnard (1963) stated that in the specimens of '*Lemur* sp.' dissected by them the trapezius inserted onto the whole clavicle. However, it is not clear if those specimens really belong to the genus *Lemur* (as currently defined), or belong instead to other taxa that were previously assigned to the genus '*Lemur*' (e.g. *Varecia variegatus*, etc.). In fact, Barnard (1875), Murie & Mivart (1872), Loth (1931), and Jouffroy (1962, 1971), Jouffroy (1975) clearly stated that in *Lemur catta* there is no insertion onto the clavicle, and our dissections of *Lemur catta* corroborate this; therefore, *Lemur* is coded here as CS-0. [**1**] In *Loris*, *Nycticebus, Pithecia*, *Saimiri*, *Aotus*, *Macaca, Colobus, Papio*, *Cercopithecus*, and hominoids the trapezius usually attaches onto the clavicle (as found in all the specimens of these taxa that were dissected by us and described in the reviewed literature, with exception to Schück, 1913a,b, who reported an insertion of the trapezius onto the scapular spine and acromion, but not onto the clavicle, in *Pongo*). Ashton & Oxnard (1963) suggested that in the specimens of *Pithecia* sp., *Aotus* sp., and *Saimiri* sp. dissected by them there was no insertion onto the clavicle. However, in the five *Pithecia monachus* specimens dissected by Ziemer (1972) there was clearly an insertion onto the clavicle, which ranged from the lateral 1/10 to 4/10 of the clavicle, the insertion being usually onto less than the lateral 1/3 of the clavicle. Also, Campbell (1937) clearly stated that in the three *Aotus lemurinus* and the two *Saimiri oerstedii* specimens dissected by him there was an insertion on the acromial end of the clavicle. Our dissections of *Pithecia pithecia*, *Aotus nancymaae*, and *Saimiri saimiri* corroborate the statements of Ziemer (1972) and Campbell (1937; i.e. in all these specimens that was an obvious insertion onto the acromial extremity of the clavicle). Therefore, *Saimiri*, *Pithecia* and *Aotus* are coded as CS-1. It is possible that the apparently contradictory statements of Ashton & Oxnard (1963) are due to the

fact that these authors did not clarify the species identification of the many specimens dissected by them. For instance, as explained above, it is possible and likely that the specimens of '*Lemur* sp.' dissected by Ashton & Oxnard (1963) are in fact not members of the genera *Lemur* (as currently defined), because within all the various species that were included in this genus in the past, only *L. catta* is now accepted as an valid extant species of *Lemur*. Apart from this issue, there is another problem with Ashton & Oxnard (1963) that may have led to possible confusion within their textual descriptions: the fact that these authors do often not refer to specific taxa when they state, for instance, that a muscle A goes to a certain bone B; i.e. they usually describe the attachments of the muscles by referring to ecological groups (e.g. terrestrial quadrupeds, arboreal quadrupeds, etc.), and not to taxonomic groups such as families, subfamilies and genera. It should be noted that Jouffroy (1962), Jouffroy (1975) reported an insertion of the trapezius onto the scapular spine and acromion, but not onto the clavicle, in *Propithecus verreauxi* and *Propithecus deckenii*. However, in our *Propithecus verreauxi* GWU PV1 specimen the trapezius was clearly inserted onto the clavicle, actually inserting onto the whole lateral 1/3 of this bone, exactly as reported in *Propithecus* sp. by Ashton & Oxnard (1963). Therefore, until more information is available, we code *Propithecus* as '?'.

46. *Trapezius inserts onto ≥ lateral 1/3 of the clavicle (L 3, CI 33, RI 60)*. [**0**] Within those primates with an insertion of the trapezius onto the clavicle, plesiomorphically the muscle inserts onto less than the lateral 1/3 of the clavicle (e.g. Loth, 1931). Of the taxa included in this cladistic analysis, this condition is found in *Macaca*, *Pithecia, Saimiri, Aotus*, *Colobus* and *Cercopithecus* (in *Macaca* the attachment is onto the lateral 1/4 of the clavicle according to Patterson, 1942 and onto the lateral extremity of this bone according to Howell & Straus, 1933; and in *Cercopithecus* it is onto less than the lateral 1/3 of the clavicle according to Hill, 1966 and to our dissections; Ashton & Oxnard, 1963 suggested that in *Colobus* the muscle goes to the lateral 1/3 of the clavicle, but our dissections clearly indicate that it goes only to the acromial extremity of this bone; in the *Pithecia*, *Saimiri* and *Aotus* specimens dissected by us and by Campbell, 1937 and Ziemer, 1972 the muscle also inserts onto less than the lateral 1/3 of the clavicle). [**1**] In *Nycticebus*, *Loris*, *Papio* and hominoids the muscle goes to the lateral 1/3, or to more than the lateral 1/3, of the clavicle. This is the case in all hominoids dissected by us and reported in the literature we reviewed, except a *Pongo* specimen reported by Hepburn (1892) in which the attachment was to the acromial end of the clavicle, and the VU GG1 gorilla specimen dissected by us, in which the insertion was nevertheless almost onto the lateral 1/3 of the clavicle (i.e. it was onto the lateral 4.0 cm of the total 14.3 cm length of this bone). In *Papio* the trapezius goes to the lateral 1/2 of the clavicle according to Hill (1970), and to a little more than the lateral 1/3 of this bone according to our dissections. Ashton & Oxnard (1963) stated that in *Nycticebus* sp. the trapezius inserts onto the lateral 1/2 of the clavicle, while Miller (1943) stated that in the *N. bengalensis* and *N. coucang*, as well as in the *Loris tardigradus*, specimens dissected by her the muscle inserted onto less than the lateral 1/2 of the clavicle. In the *Nycticebus* and *Loris* specimens dissected by us the muscle inserted onto a little less than the lateral 1/2 of the clavicle, so onto more than the lateral 1/3 of this bone; these two taxa are thus coded as CS-1. *Propithecus* is coded as '?' (see character above). [-] Inapplicable in taxa in which there is no insertion onto the clavicle (see character above).

47. *Trapezius does not insert onto the acromion (L 1, AUTAPOMORPHY)*. [**0**] In numerous non-primate mammals (e.g. Jouffroy, 1971), including *Rattus* and *Cynocephalus* and all the non-tarsoid primates included in this analysis the trapezius (or acromiotrapezius plus spinotrapezius, when both are present as distinct muscles) is usually partially inserted onto the acromion (Macalister, 1872 stated that there is no insertion onto the acromion in *Cynocephalus*, but, as explained by Leche, 1886 and Diogo, 2008 and corroborated by our dissections, in this taxon the trapezius is actually usually attached to this bone: e.g. fig. 8 of Leche, 1886). [**1**] In *Tupaia*, however, there is usually no insertion onto the acromion (corroborated by Le Gros Clark, 1924; George, 1977; and by our dissections). Woollard (1925) and Schultz (1984) suggested that in *Tarsius* the trapezius often inserts onto the scapular spine only, but it is possible that at least some of these authors were actually referring to the scapular spine plus acromion *sensu* the present work, because in our dissections of *Tarsius syrichta* the muscle clearly inserted onto the whole acromion. Until we have more information on this feature, we prefer to code *Tarsius* as '?'.

48. *Trapezius does not originate from the cranium (L 6, CI (16, RI (16)*. [**0**] According to Jouffroy (1971) the plesiomorphic condition for eutherian mammals is that the trapezius (or acromiotrapezius plus spinotrapezius, when both are present as distinct muscles) partially originates from the cranium, as found in numerous non-primate mammals and including, within the taxa examined here, tree-shrews such as *Tupaia* (e.g. Le Gros Clark, 1924; Ashton & Oxnard, 1963; George, 1977; our dissections). Regarding the primates included in this analysis, an origin from the cranium is usually found in *Nycticebus*, *Loris*, *Aotus, Pithecia, Saimiri*, *Macaca, Colobus, Papio* and *Cercopithecus* and non-hylobatid hominoids. This was corroborated in *Nycticebus* by Miller (1943), although the occipital attachment was narrow and fascial in the *Nycticebus* specimens dissected by her (we could not discern this feature in the *Nycticebus* specimens dissected by us). It was also corroborated in *Loris* by Schück (1913b), Nayak (1933), Miller (1943) and by us, in *Aotus*, *Pithecia* and *Saimiri* by Campbell (1937), Hill (1960), Ziemer (1972), Dunlap et al. (1985) and by us, in *Macaca*, *Colobus*, *Cercopithecus* and *Papio* by Polak (1908), Schück (1913b), Howell & Straus (1933), Patterson (1942), Ashton & Oxnard (1963), Hill (1966, 1970), Swindler & Wood (1973), and by our dissections, and in non-hylobatid hominoids by our observations and review of the literature. [**1**] In *Rattus*, *Cynocephalus*, *Lemur*, *Propithecus*, *Tarsius*, *Callithrix*, and *Hylobates*, there is usually no direct origin from the cranium. This was corroborated in *Rattus* and *Cynocephalus* by Leche (1886), Greene (1935), Jouffroy (1971), Diogo (2009), and our dissections (note that the structure that is often designated as 'clavotrapezius' in rats, which attaches onto the cranium, clearly seems to be homologous to the muscle cleidooccipitalis of mammals such as *Tupaia*: see characters above). It was also corroborated in *Lemur* by Murie & Mivart (1872), Barnard (1875), Jouffroy (1962), Jouffroy (1975) and by us, in *Propithecus* by Milne-Edwards & Grandidier (1875), Jouffroy (1962, 1971), Ashton & Oxnard (1963) and by us, in *Tarsius* by Burmeister (1846), Allen (1897), Woollard (1925), Schultz (1984) and by us, and in *Callithrix* by Beattie (1927), Dunlap et al. (1985) and by us. Regarding *Hylobates*, in a few specimens of this genus, and particularly of the species *H. syndactylus*, there is occasionally a small origin from the cranium, as reported by Kohlbrügge (1890–1892), Plattner (1923), Miller (1932) and Andrews & Groves (1976). However, in most specimens of this

genus, including various specimens of *H. syndactylus*, there is effectively no direct origin from this bone, as reported by Deniker (1885), Kohlbrügge (1890–1892), Sonntag (1924b), Loth (1931), Donisch (1973), Andrews & Groves (1976) and Michilsens et al. (2009) and corroborated in our dissections.

49. *Sternocleidomastoideus is hypertrophied (L 1, AUTAPOMORPHY)*. [**0**] Sternocleidomastoideus not hypertrophied. [**1**] In the *Tarsius* specimens dissected by Schultz (1984: e.g. his figs 10–10) and Niemitz et al. (1984: e.g. their fig. 14–2) as well as by us, the sternocleidomastoideus is hypertrophied, being more developed than in taxa of CS-0 and having a peculiar, wide contact with its counterpart in the dorsal midline (of the nuchal/occipital region).

50. *Pars ceratopharyngea of the constrictor pharyngis medius is absent (L 1, AUTAPOMORPHY)*. [**0**] In various non-primate mammals (e.g. House, 1953; Saban, 1968; Whidden (2000), including *Tupaia* and *Cynocephalus* (see character above), as well as in primates such as *Lemur*, *Propithecus*, *Tarsius*, *Aotus*, *Callithrix, Pithecia*, *Saimiri*, *Macaca*, *Papio*, *Cercopithecus*, *Colobus*, *Hylobates*, *Gorilla*, *Homo* and *Pan*, the constrictor pharyngis medius is at least partially attached onto the greater horn of the hyoid bone, i.e. it has a pars ceratopharyngea *sensu* Terminologia Anatomica (1998; e.g. Kohlbrügge, 1890–1892; Geist, 1933; Sprague, 1944a,b; Starck & Schneider, 1960; Swindler & Wood, 1973; Hilloowala, 1975; Immel, 1997; our dissections). [**1**] In *Rattus* the constrictor pharyngis medius is not partially attached to the greater horn of the hyoid bone (e.g. House, 1953; Saban 1958; our dissections). *Pongo*, *Loris* and *Nycticebus* are coded as '?' due to the lack of information (it was not possible to appropriately discern this feature in the dissected specimens of these genera).

51. *Presence of a distinct pars recta and pars obliqua of the cricothyroideus (L 1, CI 100, RI 100)*. [**0**] In non-primate taxa such as *Rattus*, *Cynocephalus* and *Tupaia* (e.g. Starck & Schneider, 1960; Saban, 1968; Diogo, 2009; our dissections) the external portion of the cricothyroideus is usually not clearly differentiated into a pars recta and a pars obliqua (e.g. fig. 4 of Diogo, 2009). [**1**] In the primate genera included in this analysis (except *Nycticebus*, for which there is no data: see below) there is usually a distinct pars obliqua and a distinct pars recta (e.g. fig. 58 of Starck & Schneider, 1960). This was corroborated in *Lemur, Loris* and *Tarsius* by Burmeister (1846), Starck & Schneider (1960), Menke & Henke (2008) and by us, in *Propithecus*, *Aotus*, *Pithecia, Saimiri* and *Callithrix* by us, in *Macaca* by Geist (1933), Starck & Schneider (1960) and by us, in *Cercopithecus* and *Colobus* by Starck & Schneider (1960), Saban (1968), Polak (1908) and by us, and in hominoids by Gratiolet & Alix (1866), Körner (1884), Kohlbrügge (1890–1892, 1896), Duckworth (1912), Kelemen (1948, 1969), Kleinschmidt (1938, 1950), Starck & Schneider (1960), Jordan (1971a,b,c), Himmelreich (1977), and by us. Starck & Schneider (1960) suggested that they did not found a distinct pars obliqua and a distinct pars recta in their specimens of *Hylobates syndactylus*, but these two portions were reported in other specimens of this and other *Hylobates* species by, e.g. Kohlbrügge (1890–1892), Kanagasuntheram (1952–1954)and Saban (1968), and were also found in the hylobatid specimens dissected by us. Starck & Schneider (1960) also suggested that in *Papio* the pars recta and pars obliqua are not present as distinct structures, but in the review of Hill (1970) he clearly stated, and showed, that *Papio* usually has both these structures (e.g. his fig. 49). *Nycticebus* is coded as '?' due to the lack of information (it was not possible to appropriately discern this feature in the dissected specimens of this genus).

52. *Thyroideus transversus is a distinct muscle (L 1, AUTAPOMORPHY)*. Contrary to taxa of CS-0 [**0**], in *Hylobates* [**1**] there is often a distinct muscle thyroideus transversus (also designated in the literature as 'thyroideus impar'), which lies on the ventral margin, and runs transversely to connect the posteroventromedial portion of the two sides, of the larynx (e.g. plate IX of Kohlbrügge, 1890–1892; and fig. 56A of Starck & Schneider, 1960; and also Loth, 1931; and Saban, 1968; it should be noted that this muscle might be present, but only as a very rare anomaly, in modern humans: e.g. Loth, 1931).

53. *Pterygopharyngeus is not a distinct muscle (L 3, CI 33, RI 33).* [**0**] In non-primate mammals such as *Rattus* and *Cynocephalus* (e.g. House, 1953; Smith 1992; Diogo et al. 2008b; Diogo, 2009; our dissections; see fig. 3 of Diogo, 2009), as well as in primates such as *Hylobates* (e.g. Kohlbrügge, 1890–1892; Kanagasuntheram, 1952–1954; Saban, 1968; and our dissections; see fig. 285 of Saban, 1968), the pterygopharyngeus is usually present as a distinct muscle. [**1**] In all non-hylobatid primates included in this analysis the pterygopharyngeus is either missing or fused with the constrictor pharyngis superior. Sprague (1944a) suggested that *Tupaia* has a mainly undivided superior constrictor attaching to both the pterygoid and buccal regions, thus indicating that in this taxon the pterygopharyngeus is probably integrated into the superior constrictor. As explained by Diogo et al. (2008b) and Diogo (2009), we could not find a distinct pterygopharyngeus in the *Tupaia* specimens by us, but we cannot be sure this muscle was missing in those specimens. Therefore, based on the scarce evidence available, we tentatively code *Tupaia* as CS-1, but in order to control this feature we will also run the cladistic analysis with this taxon coded as '?', and also as 'CS-0', to examine if the results of the analysis are, or not, modified by this character. It should also be noted that fig. 37 of Polak (1908) suggests that in *Colobus* there is a distinct pterygopharyngeus muscle, but our dissections showed that in this taxon there is a pars pterygopharyngea such as that of modern humans (i.e. this bundle is just slightly more differentiated from the other bundles of the superior constrictor than it is usually the case in modern humans, but still clearly makes part of the superior constrictor muscle, i.e. it does not constitute a distinct, separate muscle pterygopharyngeus). *Loris* and *Nycticebus* are coded as '?' due to the lack of information (it was not possible to appropriately discern this feature in the dissected specimens of these genera that we dissected).

54. *Thyroarytenoideus is not differentiated into a pars superior and a pars inferior (L 1, CI 100, RI 100).* [**0**] In non-primate mammals such as *Rattus*, *Cynocephalus* and *Tupaia*, the thyroarytenoideus is mainly divided into a more superior, and often lateral, pars superior – often also named 'pars lateralis' or 'pars externa' or 'ventricularis' – and a more inferior, and often mesial, pars inferior – often also named 'pars medialis' or 'pars interna' or 'vocalis' (e.g. Starck & Schneider, 1960; Saban, 1968; Diogo, 2009; our dissections: e.g. fig. 61A of Starck & Schneider, 1960; fig. 4 of Diogo, 2009). This condition is usually also found in *Lemur* and *Propithecus* (e.g. Kollmann & Papin, 1914; Starck & Schneider, 1960; our dissections), in *Macaca*, *Papio, Cercopithecus* and *Colobus* (see below), in non-hylobatid hominoids (e.g. Starck & Schneider, 1960; Saban, 1968; Jordan, 1971a,b,c; our dissections), and in *Tarsius* (Woollard, 1925 stated that the orientation of the deeper fibers is different to that of the superficial fibers in *Tarsius*, and fig. 61D of Starck & Schneider, 1960 does show a superior, lateral bundle and an inferior, medial bundle; Kollmann & Papin, 1914 and Menke & Henke, 2008 also

reported a pars superior and a pars inferior in *Tarsius*, and we also corroborated this in our dissections). It should be noted that, as explained by Saban (1968), the 'musculus vocalis' of modern humans, which lies mainly medially and inferiorly to the main body of the 'thyroarytenoideus', likely corresponds to the pars inferior of other primates and other mammals, the difference being that in taxa such as modern humans this pars inferior is deeply connected to the vocal cords. [**1**] In *Callithrix* (e.g. Beattie (1927); corroborated by Starck & Schneider (1960) and by us), as well as in *Aotus* and *Saimiri* (our dissections), the pars inferior and pars superior are usually not present as distinct bundles. The descriptions and illustrations (e.g. their fig. 61) of Starck & Schneider (1960) suggested that in *Loris*, *Pithecia*, *Aotus*, *Saimiri*, *Macaca*, *Papio*, *Cercopithecus* and *Colobus* the pars superior and pars inferior are not present as distinct structures; as explained above, this was corroborated by us in *Aotus* and *Saimiri* (as well as in *Callithrix*). However, this was contradicted in *Loris* and *Pithecia* by Harrison (1995: reported a 'thyroarytenoideus superioris' in *Loris* and *Pithecia*, although it should be noted that Kollmann & Papin, 1914 did suggest that in *Loris* there is no clear differentiation into a pars superior and a pars inferior of the thyroarytenoideus, as reported by Starck & Schneider, 1960), Tavani (1935: reported an 'ary-vocalis' in *Pithecia*, which would correspond to the pars superior *sensu* the present work, although in our VU PP1 specimen there was apparently no differentiation into a pars superior and a pars inferior). *Loris* and *Pithecia* are thus coded as '?'. Regarding the other four genera listed by Starck & Schneider (1960), it should be said that Saban (1968) reported a pars inferior and a pars superior in *Macaca* and *Papio*, Hill (1970) also reported a pars inferior and a pars superior in *Papio*, Polak (1908) reported a pars inferior and a pars superior in *Colobus*, and these two bundles were effectively well differentiated in the *Macaca*, *Colobus* and *Cercopithecus* specimens dissected by us (in the *Papio* specimen dissected by us the whole muscle was removed previously to our dissections); therefore, *Macaca*, *Papio*, *Colobus* and *Cercopithecus* are coded as CS-0. As there is no information in the literature about *Nycticebus*, this genus is coded as '?' (it was not possible to appropriately discern this feature in the *Nycticebus* specimens dissected by us). Regarding *Hylobates*, the descriptions provided in the literature are somewhat confuse and even contradictory: in fig. 56 of Starck & Schneider (1960) the thyroarytenoideus seems to be mainly undivided; Kohlbrügge (1890–1892) shows anterior and posterior portions going respectively to the arytenoid and cricoid cartilages, and stated that there is no 'thyroarytenoideus superior'; Saban (1968) describes a posterior portion going to the cricoid and arytenoid cartilages and an anterior portion going to the vocal cord and ventricule; Harrison (1995) states that at least some *Hylobates* have a distinct 'thyroarytenoideus superior'; in the *H. gabriellae* specimen dissected by us there was an anterior portion going to the arytenoid cartilage and a posterior portion going to the cricoid cartilage, so this latter portion could correspond to the pars inferior of other taxa, but we could not be completely sure about this. Therefore, until more information is available, *Hylobates* is coded as '?'.

55. *Arytenoideus obliquus is a distinct muscle (L 1, CI 100, RI 100).* [**0**] In most non-primate mammals, including *Rattus*, *Cynocephalus*, and *Tupaia* (e.g. Starck & Schneider, 1960; Saban, 1968; Diogo et al. 2008b; Diogo, 2009), as well as in the vast majority of primates, the arytenoideus obliquus is not present as a distinct muscle (e.g. fig. 69 of Starck & Schneider, 1960). As explained by Saban (1968), the arytenoideus obliquus is almost never, if ever, present, in primates other than non-hylobatid hominoids. [**1**] Within the primates included in this analysis, either reported in the literature or dissected by us, the arytenoideus obliquus is often present as a distinct muscle in *Pongo*, *Gorilla*, *Pan* and *Homo*. As explained above, there are few descriptions of the laryngeal muscles of these genera. Arytenoideus obliquus has been reported in *Pongo* by Duvernoy (1855–1856), Fürbringer (1875) and Kleinschmidt (1938; although the muscle was not reported in this taxon by Starck & Schneider, 1960). It was found in *Pan* by Sonntag (1923, 1924b), Gratiolet & Alix (1866), and Avril (1963), and was seemingly present in some of the six *Pan* specimens dissected by us (although it was not reported in the specimens of Kohlbrügge, 1896; Kelemen, 1948; Körner, 1884; Starck & Schneider, 1960; and Jordan, 1971a,b,c). It was reported in *Gorilla* by Kleinschmidt (1938), Starck & Schneider (1960) and by Sonntag (1924b), who stated that this muscle is well developed in gorilla, even more so than the arytenoideus transversus, and we did find an arytenoideus obliquus in the single gorilla in which we could analyze this feature in detail (VU GG1); Kohlbrügge (1896) did not report this muscle in *Gorilla*. In *Homo* the arytenoideus obliquus is usually present as a distinct muscle (e.g. plate 78 of Netter, 2006; see also Terminologia Anatomica, 1998, and Gibbs, 1999).

56. *Cricoarytenoideus posterior does not meet its counterpart at the dorsal midline (L 4, CI 25, RI 66).* Contrary to taxa of CS-0 [**0**], in *Homo*, *Pan, Gorilla, Papio, Colobus, Cercopithecus, Callithrix, Pithecia, Aotus* and *Saimiri* [**1**] the cricoarytenoideus posterior usually does not meet its counterpart at the dorsal midline (e.g. plate 78 of Netter, 2006). This was corroborated in *Papio* by Starck & Schneider (1960), Hill (1970) and Swindler & Wood (1973), in *Cercopithecus* by Hill (1966) and by us, in *Colobus* by Polak (1908) and by us, in *Callithrix* by Beattie (1927) and by us, and in *Aotus, Pithecia* and *Saimiri* by us. Regarding *Pan*, within the 10 specimens in which we could discern this feature (i.e. one specimen shown in plate 57 of Swindler & Wood, 1973; one specimen shown in fig. 2 of plate 9 of Gratiolet & Alix, 1866; one specimen reported by Sonntag, 1923; one specimen described by Kelemen, 1948; and the six specimens dissected by us), there was no contact with its counterpart in eight specimens. The two exceptions are two infants dissected by us (PFA 1077, PFA UNC), in which some fibers of the muscle were possibly connected to a few fibers of its counterpart at this dorsal midline (it should be noted that Jordan, 1971a,b,c examined 10 chimpanzees and stated that in a few specimens the cricoarytenoideus posterior did meet its counterpart in the dorsal midline, but he did not specified the number of specimens in which this occurred). Regarding *Gorilla*, in the single specimen where we could discern this feature in detail (VU GG1), the muscle did not meet its counterpart in the midline. It should be noted that Kohlbrügge (1890–1892) suggested that in the *Hylobates muelleri*, *H. agilis* and *H. moloch* specimens dissected by him the muscles of both sides covered the dorsal midline, but that in *H. syndactylus* and *H. lar* they were at least partially separated at the midline. However, it is not clear if this was a partial, or a complete, separation, because in the *H. syndactylus* specimen shown in fig. 56 of Starck & Schneider (1960) the muscles of both sides do meet each other at the dorsal midline. Be that as it may, the contact between the muscles of the two sides does seem to be a common condition for *Hylobates*, as this occurred in the *H. muelleri*, *H. agilis* and *H. moloch* specimens dissected by Kohlbrügge (1890–1892) and in the *H. syndactylus* specimen

reported by Starck & Schneider (1960), as well as in the single *Hylobates* specimen in which we could discern this feature in detail (VU HG1). *Loris* and *Nycticebus* are coded as '?' (it was not possible to appropriately discern this feature in the dissected specimens of these genera).

Hypobranchial muscles

57. *Geniohyoideus fused to its counterpart in the midline (L 5, CI 20, RI 50)*. [**0**] Plesiomorphically the geniohyoideus lies very close to its counterpart at the ventral midline, but it is separated from it by fascia, a median raphe, and/or some other type of tissue, so that the muscles of two sides are not fused (Saban, 1968; see, e.g. plate 53 of Netter, 2006). [**1**] Such a fusion is however usually found in *Tupaia* (e.g. Le Gros Clark, 1924; Sprague, 1944a; our dissections; e.g. fig. 16 of Le Gros Clark, 1924), *Lemur* and *Propithecus* (our dissections), *Papio* (e.g. Hill, 1970; Swindler & Wood, 1973), *Colobus* and *Cercopithecus* (our dissections), and *Homo* and *Pan* (e.g. Duvernoy, 1855–1856; Sonntag, 1923; Edgeworth (1935); also corroborated in the two chimpanzees in which we could discern this feature appropriately, i.e. in PFA 1077 and PFA UNC). In various *Nycticebus* specimens dissected by us the geniohyoideus was removed previously to our dissections, but in the specimen SDZ NP5191 the muscle was present and did seem to be mainly fused with its counterpart; therefore *Nycticebus* is coded as CS-1. As there is no information for *Loris* (it was very not possible to discern this feature in the dissected specimen of this genus), this taxon is coded as '?'.

58. *Chondroglossus is present as a distinct bundle of the hyoglossus (L 3, CI 33, RI 60)*. [**0**] The chondroglossus is not present as a distinct bundle of the hyoglossus in most non-primate mammals, including *Rattus* (e.g. Greene, 1935; Barrow & Capecchi, 1999; our dissections), as well as in primates such as *Aotus* (e.g. Immel, 1997; our dissections), *Saimiri* and *Tarsius* (our dissections), and *Callithrix* (Saban, 1968 suggested that the hyoglossus is divided into bundles in this taxon, but the descriptions of, e.g. Beattie, 1927; and Hill, 1957; as well as our dissections, clearly indicate that the muscle is usually not differentiated into bundles in this genus). [**1**] In tree-shrews such as *Tupaia* (e.g. Sprague, 1944a; Saban, 1968; our dissections; note that Sprague, 1944a erroneously stated that the chondroglossus is part of the genioglossus and not of the hyoglossus; also present in *Ptilocercus* according to Le Gros Clark, 1926) and primates such as *Lemur* and *Propithecus* (Parsons, 1898a; our dissections), *Pithecia* (our dissections), *Macaca* (Parsons, 1898a), *Colobus* (e.g. fig. 37 of Polak, 1908; our dissections), *Hylobates* (e.g. Edgeworth, 1935; Kanagasuntheram, 1952–1954; Saban, 1968; our dissections), *Pongo*, *Gorilla* and *Pan* (e.g. Edgeworth, 1935; our dissections), and modern humans (e.g. Terminologia Anatomica, 1998) the chondroglossus is present as a distinct bundle of the hyoglossus (e.g. fig. 51 of Le Gros Clark, 1926; figs12 and 13 of Parsons, 1898a). Hill (1966) suggested that in *Cercopithecus* the hyoglossus is a mainly undivided muscle originating from the greater horn of the hyoid bone only, thus suggesting that there is no distinct chondroglossus. However, fig. 399 of Saban (1968) suggests that there is a distinct chondroglossus in this taxon, and this was seemingly also the case in the *Cercopithecus* specimen dissected by us; therefore, *Cercopithecus* is coded as CS-1. Regarding *Papio*, pl. 54 of Swindler & Wood (1973) suggests that there is a distinct chondroglossus, but Hilloowala (1975) states that the hyoglossus is a mainly undivided muscle in this taxon, originating from the greater horn and the body of the hyoid bone, thus suggesting that there is no distinct chondroglossus; as we could not discern this feature in our dissections (because the hyoglossus was removed previously to the dissections), we code *Papio* as '?'. As there is no information for *Nycticebus, Cynocephalus* and *Loris*, these genera are also coded as '?' (it was not possible to discern this feature in the dissected specimens of these taxa).

59. *Hyoglossus is partially or completely fused with the thyrohyoideus (L 3, CI 33, RI 33)*. In certain taxa of CS-0 [**0**] some fibers of the hyoglossus may be occasionally blended with some fibers of the thyrohyoideus (e.g. in *Pan* according to Sonntag, 1923), but only in *Cynocephalus*, *Aotus*, *Macaca* and *Papio* [**1**] the two muscles are usually fused (partially or completely) to each other (e.g. Parsons, 1898a; Geist, 1933; Edgeworth, 1935; Starck & Schneider, 1960; Saban, 1968; Diogo, 2009; our dissections: e.g. fig. 3 of Diogo, 2009; fig. 60 of Geist, 1933).

60. *Styloglossus originates from the stylomandibular ligament (ordered multistate character) (L 2, CI 100, RI 100).* In taxa of CS-0 [**0**] the styloglossus usually originates from the cranium and from ligamentous, cartilaginous or ossified structures of the hyoid apparatus such as the stylohyal ligament. In the *Aotus*, *Callithrix*, *Pithecia* and *Saimiri* specimens dissected by us the styloglossus is at least partially originated from the stylomandibular ligament (which usually runs from the region near the external auditory meatus to the back of the mandible), the origin from this ligament being however less substantial in *Aotus* and *Pithecia* [**1**] than in *Callithrix* and *Saimiri* [**2**]. *Papio* and *Cercopithecus* are coded as '?', because in the specimens dissected by us a few fibers of the styloglossus also seemed to be originated from the stylomandibular ligament, but, we cannot be completely sure about this and, at least to our knowledge, such an origin from this ligament was not reported in these two taxa by any other authors.

61. *Styloglossus has a distinct oblique slip running anteroinferiorly to blend with the lateral portion of the hyoglossus (L 1, CI 100, RI 100)*. As explained by Gibbs (1999), contrary to the vast majority of eutherian mammals (e.g. fig. 369 of Saban, 1968) and to taxa of CS-0, including *Hylobates* (e.g. illustrations of Kanagasuntheram, 1952–1954; and Saban, 1968; our dissections) and *Gorilla* (our dissections) [**0**], in *Pan* and *Homo* [**1**] the styloglossus runs mainly longitudinally to insert onto the tongue but has a distinct oblique slip that runs anteroinferiorly at about 45° from the main body of the muscle to insert more inferiorly onto the lateral surface of the hyoglossus (e.g. plate 59 of Netter, 2006; corroborated in *Pan* by Gibbs, 1999, and by our dissections). Due to the lack of information, *Pongo* is coded as '?' (we could not discern this feature in the orangutans dissected by us).

62. *Sternohyoideus is divided into two bundles (L 1, AUTAPOMORPHY).* As noted by Leche (1886), Saban (1968) and Diogo (2009), contrary to taxa of CS-0 [**0**] in *Cynocephalus* [**1**] the sternohyoideus has a configuration in which there is a belly that is mainly inserted onto the thyroid cartilage and that then gives rise to another belly that reaches the hyoid bone.

63. *Sternohyoideus does not contact nor lie against its counterpart for most of its length (L 2, CI 50, RI 50)*. Contrary [**0**] In numerous non-primate mammals, including *Rattus* and *Tupaia*, as well as in a great number of primates, including *Lemur*, *Propithecus*, *Tarsius*, *Aotus*, *Callithrix*, *Pithecia*, *Saimiri*, *Macaca*, *Papio*, *Cercopithecus*, *Colobus*, *Pongo*, and *Gorilla*, the sternohyoideus usually contacts, or lies just next to, its counter-

part for most of its length (e.g. fig. 4 of Sonntag, 1924a). This was corroborated in *Rattus* and *Tupaia* by Le Gros Clark (1924), Greene (1935), Sprague (1944a) and by us, in *Lemur*, *Propithecus, Tarsius, Callithrix, Saimiri*, *Pithecia* and *Aotus* by Burmeister (1846), Murie & Mivart (1872), Woollard (1925), Fiedler (1953), Starck & Schneider (1960), Saban (1968), Jouffroy (1962), Immel (1997) and by us, in *Macaca, Colobus, Cercopithecus* and *Papio* by Polak (1908), Howell & Straus (1933), Thiel (1954, 1955), Hill (1966, 1970), Swindler & Wood (1973) and by us, and in *Pongo* by Fick (1895a,b) and Sonntag (1924a). Regarding *Gorilla*, Deniker (1885) stated that in the fetus dissected by him the sternohyoideus does not contact its counterpart, but in the adult gorillas described by Duvernoy (1855–1856) and Raven (1950) and dissected by us the sternohyoideus in clearly in contact with its counterpart, being only well separated from it anteriorly close to its insertion onto the hyoid bone. [**1**] In *Cynocephalus, Pan* and *Homo* the sternohyoideus usually does not contact, nor lies just next to, its counterpart for most of its length (regarding *Homo*, e.g. plate 29 of Netter, 2006). This was corroborated in *Cynocephalus* by Leche (1886) and by us, and in *Pan* by Gratiolet & Alix (1866), Sonntag (1923), Miller (1952), Starck & Schneider (1960), Swindler & Wood (1973; e.g. fig. 30 of Sonntag, 1923; plate 51 of Swindler & Wood, 1973). According to Deniker (1885), in *Hylobates* the sternohyoideus contacts its counterpart, but he does not explain if this occurs for most of its length. Kohlbrügge (1890–1892) confirms that there is such a contact in *Hylobates*, but states that anteriorly the muscle diverges from its counterpart; however, it is again not clear if the contact occurs for most of the length of the muscle, although he seems to suggest that this is not the case, i.e. that the *Hylobates* specimens dissected by him would probably be coded as CS1. Fig. 56 of Starck & Schneider (1960) also shows a *Hylobates* specimen in which at least the anterior portion of the sternohyoideus seems to be well separated from the anterior portion of its counterpart. And in the single *Hylobates* specimen in which we could analyze this feature in detail (VU HG1), the sternohyoideus was clearly well separated from its counterpart for most of its length. Therefore, we are coding this genus as '?'. *Nycticebus* and *Loris* are also coded as '?' (it was not possible to discern this feature in the dissected specimens of these taxa).

64. *Anterior portion of sternothyroideus extends anteriorly to the posterior portion of the thyrohyoideus (L 4, CI 25, RI 25).* Contrary to taxa of CS-0 [**0**], in *Rattus* and *Callithrix* (our dissections), *Hylobates* (e.g. Deniker, 1885; Kohlbrügge, 1890–1892), *Gorilla* (our dissections), and *Pan* (e.g. Gratiolet & Alix, 1866; Sonntag, 1923; Starck & Schneider, 1960; Swindler & Wood, 1973; our dissections) [**1**] the main body of the sternothyroideus is usually extended anteriorly, so that its anterior portion is anterior to the posterior portion of the main body of the thyrohyoideus. Until more information is available, *Pongo*, *Nycticebus* and *Loris* are coded as '?' (it was not possible to discern this feature in the dissected specimens of these three taxa).

65. *Omohyoideus is not a distinct muscle (L 3, CI 33, RI 0).* Contrary to taxa of CS-0 [**0**], in *Cynocephalus*, *Colobus* and *Cercopithecus* [**1**] the omohyoideus is usually not present as a distinct muscle. This was corroborated in *Cynocephalus* (e.g. Leche, 1886; Gunnell & Simmons, 2005; Diogo, 2009) and by our dissections. Hill (1966) stated that the muscle is usually missing in *Cercopithecus*. It should be noted that Dobson (1881) and Ashton & Oxnard (1963) reported this muscle in '*Cercopithecus*', but the species reported by Dobson (1881) is now included in the genus *Chlorocebus*, while it is not clear if the '*Cercopithecus* sp.' reported by Ashton & Oxnard (1963) is really a member of the genus *Cercopithecus* (but even if this is the case, the common condition for this latter genus clearly seems to be that in which the muscle is missing, as stated by Hill, 1966; and corroborated by our dissections). The muscle is usually missing in *Colobus*, as reported by Polak (1908) and corroborated by our dissections, although Ashton & Oxnard (1963) stated that they found this muscle in '*Colobus* sp.'. In a few genera of CS-0 the omohyoideus might be missing (e.g. in a *Pongo* specimen reported by Bischoff (1870), but this is a rare anomaly, and clearly not the usual condition, for these genera. Ashton & Oxnard (1963) found an omohyoideus in their two specimens of *Aotus* sp. and Immel (1997) found an omohyoideus in her specimen of *Aotus* sp., but Campbell (1937) did not find this muscle in his three specimens of *Aotus lemurinus*, Dunlap et al. (1985) did not find this muscle in their specimen of *Aotus* sp., and we did not find this muscle in our *Aotus nancymaae* specimen GWUANT AN1; until more information is available, we code *Aotus* as '?'.

66. *Omohyoideus has an intermediate tendon (L 2, CI 50, RI 50).* [**0**] In most non-primate mammals (e.g. Le Gros Clark, 1924; Sprague, 1944a; Saban, 1968), including *Rattus* (e.g. Greene, 1935; our dissections), as well as in primates such as *Lemur*, *Propithecus*, *Tarsius*, *Loris*, *Nycticebus*, *Callithrix*, *Saimiri*, *Pithecia*, *Macaca*, *Papio*, *Hylobates*, *Pongo* and *Gorilla*, the intermediate tendon of the omohyoideus is usually (i.e. in ≥ 50% of the cases) missing. It is missing in the *Lemur, Propithecus, Loris, Nycticebus* and *Callithrix* specimens dissected by Cuvier & Laurillard (1849), Mivart & Murie (1865), Murie & Mivart (1872), Beattie (1927), Hill (1957), Ashton & Oxnard (1963), and by us, in the *Tarsius*, *Saimiri* and *Pithecia* specimens dissected by us, and in the *Macaca* and *Papio* specimens reported by Loth (1931), Howell & Straus (1933), Hill (1970), and Hilloowala (1980) and dissected by us. It was missing in the *Hylobates* specimens reported by Deniker (1885) and Sonntag (1924b) and examined by us, and within the *H. syndactylus*, *H. agilis* and *H. moloch* specimens dissected by Kohlbrügge (1890–1892), only *H. syndactylus* had a very small intermediate tendon. Regarding *Pongo*, the tendon was described by Michaëlis (1903) and Primrose (1899, 1900), but was reported to be absent by most authors, including Sandifort (1840), Fick (1895a,b), Sonntag (1924a,b), Brandes (1932) and Kallner (1956), and in the review done by Ashton & Oxnard (1963) they stated that the tendon is missing in about 71.4% of orangutans. Concerning *Gorilla*, the tendon was reported in one specimen by Macalister (1873), and one specimen by Raven (1950), but was missing in two specimens dissected by Deniker (1885), one specimen reported by Duvernoy (1855–1856), one specimen reported by Bischoff (1880), one specimen examined by Testut (1884), and the single specimen in which we could analyze this feature in detail (VU GG1); therefore it was missing in a total of six out of eight gorillas. It should be noted that Woollard (1925) suggested that in *Tarsius* the intermediate tendon of the omohyoideus is usually present, and that this suggestion was followed by Hill (1955), but Allen (1897) clearly reported the absence of this tendon in *Tarsius*, and our dissections corroborated the absence of this tendon in this taxon, indicating that the tendon is effectively often absent in the members of this genus, which is therefore coded as CS-0. [**1**] In *Tupaia*, *Pan* and *Homo* this tendon is usually (i.e. in ≥ 50% of the cases) present. Concerning *Tupaia*, an intermediate tendon was not described by George (1977), but it was found by Le Gros Clark (1924), by Sprague (1944a), and by Ashton & Oxnard (1963). Regarding *Pan*, an intermediate tendon was found by

the vast majority of authors, including Vrolik (1841), Gratiolet & Alix (1866), Bischoff (1870), Sonntag (1923, 1924a,b) and Macalister (1871), as well as in all the six specimens dissected by us, and according to the review of Ashton & Oxnard (1963), it is present in all of *Pan*. As explained by Loth (1931) and Gibbs (1999), the intermediate tendon is present in the vast majority of modern humans (e.g. pl. 59 of Netter, 2006). *Aotus* is coded as '?' (because it is not clear if the usual condition is that in which the omohyoideus is present or not, see character above; in those cases in which the muscle is present there is seemingly no intermediate tendon of the omohyoideus, as reported by Immel (1997), so one would code this taxon as CS-0; in the cases in which the muscle is absent, one would code this taxon as 'Inapplicable'). [-] Inapplicable in *Cynocephalus, Colobus* and *Cercopithecus*, because the omohyoideus is usually not present as a distinct muscle (see character above).

67. *Omohyoideus occasionally has three bellies (L 1, CI 100, RI 100).* Contrary to taxa of CS-0 [**0**], in at least some specimens of *Gorilla*, *Pan* and *Homo* [**1**] the omohyoideus has three bellies (usually a superior belly, an inferomedial belly, and an inferolateral belly, e.g. fig. fig. 32 of Sonntag, 1923). Regarding *Pan*, this was found by Gratiolet & Alix (1866; who designated one of the inferior bellies as 'cleidohyoideus'), by Sonntag (1923), and in two of the six specimens dissected by us. Concerning *Gorilla*, it was reported by Raven (1950). As explained in the recent review of Rajalakshmi et al. (2008), the presence of three bellies of the omohyoideus is an uncommon variant in modern humans, being for instance found in about 3% of the cases according to their review. Within the specimens of taxa of CS-0 that were either dissected by us or reported by the authors of the works that we reviewed, there was not a single case in which the omohyoideus was divided into a superior belly and two inferior bellies. *Aotus* is coded as '?' (because it is not clear if the usual condition is that in which the omohyoideus is present or not, see character above; in those cases in which the muscle is present it is mainly continuous, as reported by Immel (1997), so one would code this taxon as CS-0; in the cases in which the muscle is absent, one would code this taxon as 'Inapplicable'). [-] Inapplicable in *Cynocephalus, Colobus* and *Cercopithecus*, because the omohyoideus is usually not present as a distinct muscle (see character above).

Pectoral muscles

68. *Serratus anterior and levator scapulae are separated (ordered multistate character) (L 2, CI 100, RI 100).* [**0**] In non-primate taxa such as *Rattus*, *Cynocephalus* and *Tupaia*, as well as in most strepsirrhines, including *Nycticebus, Propithecus*, *Lemur* and *Loris*, these two muscles are deeply blended (e.g. Haughton, 1864, 1865; Murie & Mivart, 1872; Miller, 1932; Jouffroy, 1962; Hill, 1957, 1966, 1970; our dissections). In *Tarsius* (e.g. Woollard, 1925; Miller, 1932; Schultz, 1984; our dissections), as well as in the New World monkeys and Old World monkeys examined by us, i.e. *Aotus, Callithrix, Pithecia*, *Saimiri*, *Macaca*, *Papio*, *Cercopithecus* and *Colobus* [**1**], the two muscles are less blended distally (at their insertion onto the scapula) than in taxa of CS-0, but more blended proximally than in hominoids [**2**], in which the two muscles are well separated (e.g. Deniker, 1885; Sullivan & Osgood, 1927; Miller, 1932; Ashton & Oxnard, 1963; our dissections). According to the review of Ashton & Oxnard (1963), these muscles are well separated in 1.2% of New World monkeys and 9.4% of Old World monkeys only, while they are well separated in 98.3% of hominoids.

69. *Rhomboideus major and rhomboideus minor are not distinct muscles (L 4, CI 25, RI 57).* [**0**] In several non-primate mammals (e.g. Jouffroy, 1971), including taxa such as *Rattus* and *Tupaia*, as well as in primates such as *Callithrix*, *Macaca*, *Cercopithecus* and *Papio*, there are usually two rhomboidei muscles (which are often named 'rhomboideus dorsi or thoracis' and 'rhomboideus cervicis' in non-primate mammals) that are very similar to the rhomboideus major and rhomboideus minor of modern humans, so we code this as a primary homology and thus code these six genera and *Homo* as CS-0 (Diogo et al. 2009a). This was corroborated in *Macaca* by Howell & Straus (1933) and Patterson (1942), although Schück (1913b) considered there was no differentiation into rhomboideus major and rhomboideus minor in a specimen of *M. maura*. In the single *Macaca* specimen in which we could discern this feature in sufficient detail (VU MF1) there were two muscles, one possibly corresponding to the rhomboideus minor plus rhomboideus occipitalis, and the other thus possibly corresponding to the rhomboideus major. A rhomboideus major and a rhomboideus minor were also described by Hill (1966) and found by us in *Cercopithecus*. Macalister (1871) and Schück (1913b) stated that the rhomboideus major and rhomboideus minor were not differentiated in a specimen of *Papio hamadryas* and in a specimen of *P. cynocephalus*, but most authors (e.g. Champneys, 1872; Michaëlis, 1903; Hill, 1970; Swindler & Wood, 1973), agree that the members of this genus do effectively usually have both these muscles, and this was corroborated in our dissections. Hill (1957, 1959, 1962) stated that the rhomboideus major and rhomboideus minor are usually not present as distinct muscles in *Callithrix*, but Beattie (1927) described in detail these two muscles in the *Callithrix* specimens dissected by her, and we also found this muscle in the *Callithrix* specimen dissected by us; therefore, this taxon is coded as CS-0. [**1**] In *Cynocephalus* (e.g. Leche, 1886; our dissections) as well as in *Lemur*, *Propithecus*, *Loris*, *Nycticebus*, *Tarsius, Aotus, Pithecia* and *Saimiri* and the non-human hominoids dissected by us and described in the literature (except in the fetal *Hylobates* specimen described by Deniker, 1885; one of the four *Hylobates* specimens reported by Schück, 1913b; and in the *Pithecia* specimens dissected by Ziemer, 1972) the rhomboideus major and rhomboideus minor are not present as distinct muscles (i.e. these taxa have, instead, a single, undivided muscle rhomboideus). *Colobus* is coded as '?' because fig. 7 of Polak (1908) shows a *C. guereza* specimen that apparently has a distinct rhomboideus major and a distinct rhomboideus minor, such as those usually found in other Old World monkeys such as *Macaca*, *Papio* and *Cercopithecus*, but in the *C. guereza* specimen dissected by us the rhomboid complex did not seem to be divided into a rhomboideus major and a rhomboideus minor.

70. *Rhomboideus occipitalis is not a distinct muscle (L 3, CI 33, RI 50).* [**0**] In various non-primate mammals (e.g. Jouffroy, 1971), including taxa such as *Rattus* and *Tupaia*, as well as in primates such as *Lemur*, *Loris, Nycticebus*, *Tarsius*, *Aotus*, *Callithrix*, *Pithecia*, *Saimiri*, *Macaca*, *Colobus*, *Cercopithecus*, *Papio*, and *Pongo*, the rhomboideus occipitalis is usually present as a distinct muscle. The rhomboideus occipitalis is present in *Lemur*, *Nycticebus* and *Loris*, as noted by Murie & Mivart (1872), Barnard (1875), Miller (1943), Jouffroy (1962, 1971), Jouffroy (1975) and Ashton & Oxnard (1963), although it is often a thin structure in *Loris* and *Nycticebus*, as described by Murie & Mivart (1872) and Miller (1943), and may even be missing in *Loris* specimens according to Schück (1913b; the muscle was also reduced or even absent in our *Nycticebus pygmaeus* VU NP1 and VU NP2

specimens, and was seemingly present as a thin structure in our *Nycticebus coucang* SDZ NC43129 specimen, while we could not discern if it was present in our *Loris tardigradus* SDZ LT53090 specimen). The rhomboideus occipitalis is also present in *Tarsius*, as described by Niemitz et al. (1984) and Schultz (1984) and corroborated by our dissections (it should be noted that the 'rhomboideus capitis' described in *Tarsius* by Murie & Mivart, 1872 and Woollard, 1925; is probably not homologous to this muscle: see below). Miller (1932) stated that *Papio anubis*, *Macaca mulatta* and *Cercopithecus mona* do not have a rhomboideus occipitalis, but in the several specimens of different species of these three genera, dissected by Haughton (1864, 1865), Barnard (1875), Schück (1913b), Howell & Straus (1933), Patterson (1942), Ashton & Oxnard (1963), Hill (1966, 1970)and Swindler & Wood (1973), and by us, this muscle is clearly present. It is also present in *Colobus*, *Aotus*, *Callithrix*, *Pithecia* and *Saimiri*, as noted by Polak (1908), Beattie (1927), Campbell (1937), Ashton & Oxnard (1963), Ziemer (1972) and Dunlap et al. (1985) and corroborated by our dissections. It was also found in the *Pongo* specimens described by the vast majority of authors and dissected by us, being rarely absent in the members of this genus (as it was, apparently, in the specimen described by Fick, 1895a,b). [**1**] In *Cynocephalus*, *Hylobates*, *Gorilla*, *Pan* and *Homo* the rhomboideus occipitalis is usually not present as a distinct muscle. *Propithecus* is coded as '?', because Ashton & Oxnard (1963) stated that in this taxon the rhomboideus occipitalis is present, but this muscle was missing in the specimens dissected by Jouffroy (1962) and by us.

71. *Levator scapulae does not extend to C5 (L 1, CI 100, RI 100).* [**0**] In non-primate taxa such as *Rattus*, *Tupaia* and *Cynocephalus* and numerous primates, including *Lemur*, *Propithecus*, *Loris, Tarsius*, *Aotus*, *Pithecia*, *Saimiri*, *Callithrix*, *Macaca*, *Colobus*, *Cercopithecus* and *Papio*, the origin of the levator scapulae extends (posteriorly) to the sixth cervical vertebra (C6) and/or to more posterior vertebrae. Leche (1886) states that in *Cynocephalus* it originates from C3 to C7 and Gunnell & Simmons (2005) state that in this genus it originates from 3 to 5 vertebrae between C2 and C7. George (1977) stated that in *Tupaia* and other tree-shrews it attaches to C1 and C3–C7 or to C1–C7; Le Gros Clark (1924, 1926) reported that in *Tupaia* and *Ptilocercus* it attaches to C1–C7 and C2–C7, respectively, and Gunnell & Simmons (2005) stated that in *Tupaia* it originates from 3 to 5 vertebrae between C2 and C7. Peterka (1936) and Greene (1935) stated that in rats the muscle usually originates from C1 to T2 and from C4 to C7, respectively. In *Lemur* the muscle extends to C7 according to Murie & Mivart (1872), Barnard (1875) and to our dissections, and to C6 according to Jouffroy (1960a,b, 1962), Jouffroy (1975). In *Propithecus* it extends to C7 according to Jouffroy (1962), Jouffroy (1975), and to our observations. Schück (1913b) stated that in *Loris* the 'levator scapulae' originated from C1 to C4, but this author clearly seems to refer to only a part of the levator scapulae *sensu* the present work, because in all the specimens dissected by Mivart & Murie (1865), Murie & Mivart (1872) and Miller (1943) the muscle extends to C7, and in our *Propithecus* SDZ LT53090 specimen it also seemed to extend to C6 or C7. Regarding *Tarsius*, the usual condition is that the muscle extends to C6 or C7, as noted by Burmeister (1846), Barnard (1875), Allen (1897) and Schultz (1984) and corroborated by our dissections, although Woollard (1925) stated that it extended only to C5 in the specimens dissected by him. Within the 10 *Pithecia* limbs dissected by Ziemer (1972) the origin was from C1 to C6 in eight limbs, from C1 to C5 in one limb, and from C2 to C5 in one limb, so the usual condition for this genus seems to be that in which the origin of this muscle extends posteriorly at least to C6, as also found in our *Pithecia* GWUANT PP1 and VU PP1 specimens. In *Saimiri* and *Aotus* the origin of the muscle extends to C7 according to Dunlap et al. (1985) and to our dissections. As noted by Howell & Straus (1933) and corroborated by our observations, in *Macaca* the levator scapulae (which they designated as the 'cervical part of the serratus anterior') usually originates from C1, C2, C3 or C4 to C7. Hill (1970) stated that in *Papio cynocephalus* and *P. anubis* the levator scapulae originates from C1 to C3 or sometimes from C1 to C4, but this was probably because he confused the posterior limit of the levator scapulae with the actual separation between the anterior and posterior portions of this muscle: as stated by Ashton & Oxnard (1963), in *Papio* there is, effectively, usually a small space between the C3 and C4 origins of the levator scapulae that partly separates the anterior and posterior portions of this muscle, which commonly originates from C1 to C7 or from C1 to C3 plus C5 to C7, as found by us and reported in *P. cynocephalus* by Schück (1913b), in *P. anubis* by Miller (1932) and Swindler & Wood (1973), and in *Papio* sp. by Ashton & Oxnard (1963; in the *P. anubis* specimen dissected by us, origin is from C1 to C7). Hill (1966) also stated that in *Cercopithecus mitis* the levator scapulae originates from C1 to C4 and Miller (1932) stated that in *Cercopithecus mona* the origin is not from all cervical vertebrae, but, again, this was again probably because these authors confused the posterior limit of the levator scapulae with the actual separation between the anterior and posterior portions of this muscle: in our *Cercopithecus diana* specimen origin was clearly from C1 to C7, as was also the case in the *Colobus* specimens dissected by Polak (1908) and by us. Beattie (1927) suggested that in *Callithrix jacchus* the origin of the levator scapulae is from C3 to C5, but in all the *C. jacchus*, *C. argentata* and *C. pygmaea* specimens dissected by Dunlap et al. (1985) and by us the origin clearly extended to C7; therefore, the usual condition for this genus does seem to be that in which the origin of this muscle does extend to C7. [**1**] In hominoids the origin of the levator scapulae usually does not extend posteriorly to C5. In *Hylobates* (including *H. syndactylus*) Deniker (1885), Plattner (1923), Sonntag (1924b) and Michilsens et al. (2009) described an origin from C1 to C4, Stewart (1936) and Donisch (1973) described an origin from C1 to C5, Kohlbrügge (1890–1892) found an origin from C1, C3 and C4, and we found an origin from C1 to C5 in one specimen of *H. lar* and from C1 to C3 or C1 to C4 in one specimen of *H. gabriellae*, while Schück (1913b) reported an origin from C1 to C3 in three *H. syndactylus* specimens. In *Pongo* Church (1861–1862) described an origin from C1 and Duvernoy (1855–1856) and Primrose (1899, 1900) from C1 to C3, while Hepburn (1892), Schück (1913b), Sonntag (1924a) and Sullivan & Osgood (1927), as well as ourselves, found an origin from C1 to C4, and Stewart (1936) reported an origin from C1 to C5; interestingly, Fick (1895a,b) stated that the origin of the muscle extended to C7. Regarding *Gorilla*, Deniker (1885), Hepburn (1892), Pira (1913), Raven (1950) and Preuschoft (1965) found an origin from C1 to C4, as we did, and Duvernoy (1855–1856), Sommer (1907) and Stewart (1936) from C1 to C5. Macalister (1873) stated that in the gorilla specimen dissected by him the origin was from C4 to C6, but this seems rather unlikely, because in all the other gorilla specimens, as well as in the vast majority of other hominoids, the levator scapulae is always partially originated from the atlas and the other anterior cervical vertebrae. In a few modern humans the muscle does not attach onto C1 and/or does reach C7, but in most cases it originates from C1 to C4 (more often) or from C1 to C3 (less often; e.g. Gibbs, 1999). Concerning *Pan*, Sonntag (1923) described an origin from C1 to C5 and Swindler & Wood (1973) from C1 to C4, and an origin from C1

to C4 was also found in one side of the specimen described by Miller (1952), but in the other side of this specimen, as well as in one side of the specimen dissected by Stewart (1936) and in the three specimens reported by Schück (1913b) and the specimens described by Hepburn (1892), the origin was from C1 to C3. In the chimpanzees described by Gratiolet & Alix (1866) it was from C2 to C3, while in one side of the specimen dissected by Stewart (1936) and in the specimen analyzed by Champneys (1872) it was from C1 to C2 only. According to Miller (1943), the 'levator scapulae' originates from C1 to C4 in *Nycticebus bengalensis and N. coucang*. However, as many other authors, Miller (1943) often considered the levator scapulae as part of the serratus anterior, and it is sometimes difficult to discern if she was referring to the whole levator scapulae *sensu* the present work, or to just part of it (see also comments above). In fact, although it was difficult to analyze this feature in our dissections, in our *N. pygmaeus* VU NP1 and VU NP2 specimens the muscle did not extend posteriorly to C5, but in our *N. coucang* SDZ NC43129 specimen the muscle did extend to C6 or C7. Therefore, until more information is available about *Nycticebus*, we prefer to code this taxon as '?'.

72. *Levator claviculae is not a distinct muscle (L 1, AUTAPOMORPHY)*. [**0**] Non-primate taxa such as *Rattus*, *Cynocephalus* and *Tupaia*, as well as all non-human primates included in this analysis, have a levator claviculae (this muscle was found in all specimens of CS-0 dissected by us and described in the literature reviewed by us, except in one specimen of *Hylobates moloch* reported by Kohlbrügge, 1890–1892). [**1**] In *Homo* the levator claviculae is usually not present as distinct muscle.

73. *Atlantoscapularis posticus is a distinct muscle (L 1, AUTAPOMORPHY)*. There has been much confusion in the literature about the atlantoscapularis posticus. Following Jouffroy (1971), Ziemer (1972) and Dunlap et al. (1985), in the present work we use strict criteria to recognize a distinct atlantoscapularis posticus: (i) when its insertion is clearly lateral and/or dorsal to that of the main body of the levator scapulae, and (ii) when there are three distinct, separate slips originating from the atlas to the shoulder (i.e. one from the levator claviculae, one from the levator scapulae, and one from the atlantoscapularis posticus). [**0**] In non-primate taxa such as *Rattus* and *Cynocephalus* as well as in all primates included in this analysis the atlantoscapularis posticus is usually not present as a distinct muscle. [**1**] Within all the taxa studied by us, only *Tupaia* has a distinct muscle atlantoscapularis posticus *sensu* the present work (e.g. Le Gros Clark, 1924; Jouffroy, 1962; Kladetsky & Kobold, 1966; George, 1977; our dissections). It should be noted that in primate literature some authors use the name 'atlantoscapularis posticus' to designate the most anterior head of origin of the levator scapulae (from C1; e.g. the descriptions of *Macaca* by Haughton, 1864, 1865; Howell & Straus, 1933; and Kajiyama, 1970). However, in all primates dissected by us in which the levator scapulae is partially originated from C1 the head of origin that originates from this vertebra is basically similar to the other levator scapulae heads (originating from other cervical vertebrae), and is almost always fused to these heads distally, clearly forming a single muscular belly (of the muscle levator scapulae) that attaches onto the superior angle of the scapula. This condition is thus clearly different from that found in *Tupaia*, in which the atlantoscapularis posticus is well separated from, and does not insert onto the same region of the scapula in which inserts the, muscle levator scapulae (see above). [-] This character is inapplicable in taxa where the levator claviculae and/or levator scapulae are not present as distinct muscles.

74. *Levator claviculae inserts onto the clavicle (L 2, CI 50, RI 75)*. [**0**] In non-primate taxa such as *Rattus*, *Cynocephalus* and *Tupaia*, as well as in primates such as *Lemur*, *Propithecus*, *Loris*, *Nycticebus*, *Tarsius*, *Aotus*, *Callithrix*, *Pithecia*, *Saimiri*, *Macaca*, *Cercopithecus* and *Papio*, the levator claviculae usually attaches onto the scapula, acromion and/or the acromioclavicular joint, but not directly onto the clavicle. This was corroborated in *Rattus*, *Cynocephalus*, *Tupaia*, *Lemur*, *Propithecus*, *Tarsius*, *Aotus*, *Callithrix* and *Pithecia* by Burmeister (1846), Murie & Mivart (1872), Barnard (1875), Leche (1886), Allen (1897), Le Gros Clark (1924), Woollard (1925), Beattie (1927), Campbell (1937), Greene (1935), Hill (1957), Jouffroy (1962), Jouffroy (1975), Ashton & Oxnard (1963), Ziemer (1972), George (1977), Schultz (1984), Dunlap et al. (1985) and by us. In the *Saimiri sciureus* GWUANT SS1 specimen dissected by us a few fibers attached onto the sternal end of the clavicle, but in the specimens of this and other *Saimiri* species dissected by Campbell (1937), Ashton & Oxnard (1963) and Dunlap et al. (1985) there was no attachment onto the clavicle, so this latter configuration seems to represent the usual condition for this genus. Regarding *Macaca*, Haughton (1864) did describe a partial insertion of the levator claviculae onto the clavicle in a specimen of *Macaca* sp., but in all the other *Macaca* specimens that he described in his (1965) paper, and dissected by Schück (1913b), Howell & Straus (1933), Patterson (1942) and Ashton & Oxnard (1963) and by us, the muscle did not attach directly onto the clavicle. Regarding *Papio*, Champneys (1872) reported an insertion onto the clavicle in the single *P. anubis* dissected by him, but in all the *P. anubis* specimens dissected by Swindler & Wood (1973) and by us, as well as in the specimens of *P. hamadryas* dissected by Miller (1932), of *P. cynocephalus* reported by Schück (1913b) and of *Papio* sp. described by Ashton & Oxnard (1963), the insertion was always onto the scapula only. Concerning *Cercopithecus*, the insertion seems to be exclusively onto the scapula, as noted by Haughton (1864, 1865) and Miller (1932) and illustrated by Hill (1966), although in our *C. diana* GWUANT CD1 specimen the muscle was also partially inserted onto the lateral extremity of the clavicle. Mivart & Murie (1865) and Murie & Mivart (1872) suggested that in *Loris tardigradus* the levator claviculae inserts onto the acromial end of the clavicle, but in all the specimens of this species dissected by Schück (1913b), Miller (1943) and by us, the insertion is onto the acromion and acromioclavicular articulation (and thus not directly onto the clavicle). Barnard (1875) and Ashton & Oxnard (1963) reported that the muscle inserts onto the acromial end of the clavicle in '*Nycticebus* sp.', but it is difficult to discern if the specimens dissected by them are really members of the genus *Nycticebus* as currently defined. In fact, in the two *N. bengalensis* specimens and the single *N. coucang* specimen dissected by Miller (1943), as well as in the two *N. coucang* and the single *N. pygmaeus specimens* in which we could analyze this feature in detail, the muscle inserted onto the acromion and acromioclavicular articulation only (at first sight, the muscle does seem to attach onto the clavicle, but a detailed analysis does reveal that it does actually not attach directly onto this bone). Therefore, the usual condition for *Loris* and *Nycticebus* is that there is no direct attachment onto the clavicle; these two taxa are coded as CS-0. [**1**] In *Colobus* and non-human hominoids the levator claviculae is at least partially attached onto the clavicle. It should be noted that Ashton & Oxnard (1963) stated that in the two specimens of *Colobus* sp. dissected by them the levator claviculae did insert onto the scapula only. However, in the various *Colobus* specimens dis-

sected by Polak (1908) the insertion was also onto the lateral margin of the clavicle, and this was corroborated by our dissections of *Colobus*, in which the muscle was, in fact, partially inserted onto more than the lateral 1/3 of the clavicle. Therefore, *Colobus* often has an insertion onto the clavicle, being coded as CS-1. [-] This character is inapplicable in *Homo*, because the levator claviculae is usually not present as a distinct muscle.

75. *Levator claviculae inserts deep to the insertion of the trapezius (L 3, CI 33, RI 77)*. [**0**] In non-primate taxa as, e.g. *Rattus*, *Cynocephalus* and *Tupaia*, as well as in primates such as *Lemur*, *Propithecus*, *Loris, Nycticebus*, *Tarsius*, *Aotus* and *Callithrix*, the distal insertion of the levator claviculae is usually superficial (lateral and/or dorsal) to the trapezius (or acromiotrapezius and/or spinotrapezius, when the spinotrapezius is present as a distinct muscle). This was corroborated in *Lemur*, *Propithecus*, *Loris, Nycticebus* and *Tarsius* by Murie & Mivart (1872), Milne-Edwards & Grandidier (1875), Miller (1943), Jouffroy (1962, 1971), Jouffroy (1975), Ashton & Oxnard (1963), Kladetsky & Kobold (1966), Niemitz et al. (1984), Schultz (1984), and by us, in *Callithrix* by Ashton & Oxnard (1963), Dunlap et al. (1985) and by us, and in *Aotus* by Campbell (1937), Dunlap et al. (1985) and by us (note that Ashton & Oxnard, 1963 confusingly reported an insertion deep to the trapezius in *Aotus*, but their plate 1 shows an *Aotus* specimen in which the levator claviculae passes superficially to the trapezius, as found in the *Aotus* specimens dissected by other authors and by us). [**1**] As reported by Schück (1913a,b), Stewart (1936), Ashton & Oxnard (1963) and Jouffroy (1971), in all non-human catarrhines included in the analysis, but also in a few other primates such as *Saimiri* and *Pithecia*, the levator claviculae is usually deep to (covered either laterally or dorsally by) the trapezius. This configuration was found in *Saimiri* by Howell & Straus (1933), Campbell (1937), Dunlap et al. (1985) and by us, in *Pithecia* by Ashton & Oxnard (1963), Ziemer (1972) and by us, in *Macaca*, as shown in fig. 40 of Howell & Straus (1933) and found by Patterson (1942) and by us, in *Cercopithecus* as shown in fig. 40 of Hill (1966) and corroborated by us, in *Colobus* as described by Polak (1908) and Ashton & Oxnard (1963) and found by us, and in *Papio*, as shown in fig. 31 of Hill (1970), described by Champneys (1872), and found in our dissections. Regarding *Hylobates,* our observations agree with the description of Kohlbrügge (1890–1892), Schück (1913a,b), Stewart (1936), Ashton & Oxnard (1963) and Andrews & Groves (1976), according to which the levator claviculae is deep to the trapezius. Concerning *Pongo*, Andrews & Groves (1976) stated that the levator claviculae is mainly lateral to the trapezius, but Schück's (1913a,b), Sullivan & Osgood's (1927), Stewart's (1936), Kallner's (1956) and Ashton & Oxnard's (1963) descriptions and our observations indicate that it is in fact usually deep to the trapezius. Concerning *Gorilla*, Andrews & Groves (1976) stated that the levator claviculae passes laterally to the trapezius, but Schück (1913a,b) stated that it is actually deep to the trapezius, a statement corroborated by the descriptions of Deniker (1885), Sommer (1907), Raven (1950), Preuschoft (1965) and Jouffroy (1971) and by our dissections. Concerning *Pan*, Miller (1952) and Andrews & Groves (1976) stated that it is lateral to the trapezius but most authors, e.g. Champneys (1872), Schück (1913a,b) and Ashton & Oxnard's (1963), agree with our observations that the levator claviculae is usually mainly deep to the trapezius. [-] This character is inapplicable in *Homo*, because the levator claviculae is not present as a distinct muscle.

76. *Levator claviculae inserts onto a more medial portion of the clavicle (L 1, uninformative)*. As described by Deniker (1885), Chapman (1900) and Schück (1913a,b), and quantitatively shown by Stewart (1936; i.e. position index from acromial end of clavicle is 18.3 in *Hylobates*, contrary to, e.g. 38.2 and 38.4 in *Gorilla* and *Pan*, respectively), and corroborated by our own dissections, in *Hylobates* [**0**] the insertion of the levator claviculae on the clavicle is considerably more lateral than in other non-human hominoids and in *Colobus* [**1**]. In the *Colobus* specimen dissected by us, the insertion is onto more than the lateral 1/3 of the clavicle. In *Hylobates*, according to Deniker (1885), Kohlbrügge (1890–1892), Schück (1913a,b), Chapman (1900) and Stewart (1936) and to our observations, the insertion is usually near the acromial extremity of the clavicle or even onto the acromioclavicular joint. In *Pongo*, according to Primrose (1899, 1900), the insertion is at the junction of the middle and lateral third of the bone, according to Sullivan & Osgood (1927) is lateral to the middle of the clavicle, and according to Schück (1913a,b), Michaëlis (1903) and Kallner (1956) is onto the pars acromialis of the clavicle. In *Gorilla* it is just lateral to the midpoint of the clavicle according to Stewart (1936), and lies basically in the midpoint according to our dissections. In *Pan* it is to the lateral 1/3 of the clavicle according to Gratiolet & Alix (1866), to the lateral 1/2 of the clavicle according to Champneys (1872), to a point just lateral to the middle of the clavicle according to Stewart (1936), and to the middle third of the clavicle according to Miller (1952). [-] This character is inapplicable in taxa where the levator claviculae is not present as a distinct muscle or where this muscle is present but does not insert onto the clavicle.

77. *Subclavius originates from the third rib (L 1, AUTAPOMORPHY)*. [**0**] In non-primate taxa such as *Rattus*, *Tupaia* and *Cynocephalus*, as well as in all non-hylobatid primates included in this analysis, the subclavius usually originates from the first rib, its costal cartilage and/or surrounding structures and, more rarely, from the sternum and/or the second rib, but usually does not originate from the third rib. The descriptions in the literature as well as our dissections consistently show that the muscle usually does not originate from rib 2 and/or rib 3 in *Rattus*, *Cynocephalus*, *Tupaia*, *Lemur*, *Propithecus*, *Loris, Nycticebus*, *Tarsius*, *Aotus*, *Callithrix*, *Pithecia*, *Saimiri*, *Macaca*, *Papio*, *Colobus*, *Cercopithecus*, *Gorilla* and *Pan*. Regarding *Pongo*, Hepburn (1892) and Sonntag (1924b) referred to an origin from ribs 1 and 2, and this was followed by Gibbs (1999) and Gibbs et al. (2002), but in the specimens dissected by Primrose (1899, 1900), Sullivan & Osgood (1927), Stewart (1936) and Kallner (1956), the origin is from rib 1 only. Be that as it may, the origin is usually not from rib 3 in *Pongo*. [**1**] In hylobatids the origin of the subclavius often extends to rib 3 and/or its costal cartilage, as described by Kohlbrügge (1890–1892), Hepburn (1892), Sonntag (1924b), Miller (1932), Andrews & Groves (1976) and Michilsens et al. (2009) and corroborated by our own dissections of the *H. lar* specimen HU HL1. It should be noted that Michilsens et al. (2009) only reported such an origin from rib 3 in the three *H. lar* specimens dissected by them, i.e. they did not report an origin from this rib in the two *H. pileatus*, the two *H. moloch*, and the four *H. syndactylus* that they analyzed. Also, in the fetal *Hylobates* specimen dissected by Deniker (1885) there was no origin from rib 3. However, Andrews & Groves (1976) reviewed information regarding all the hylobatid specimens dissected by them and by Bischoff (1870), Ruge, 1890–1891; Kohlbrügge (1890–1892), Grönroos (1903), Plattner (1923), Kanagasuntheram

(1952–1954) and Ashton & Oxnard (1963), and concluded that in *H. syndactylus* the muscle usually originates from ribs 2 to 3, in *H. hoolock* from ribs 1 to 2, in *H. muelleri* from ribs 2 to 3, in *H. moloch* from ribs 2 to 3 and in *H. agilis* from ribs 2 to 3, thus indicating that apart from *H. lar*, such an origin from rib 3 also often occurs in members of various other hylobatid species. Gibbs (1999) and Gibbs et al. (2002) used this character, but in a different way, for instance coding the origin from rib 1 (and not from ribs 2 and/or 3) as the derived condition. This was an erroneous coding because this is the plesiomorphic condition for primates, for anthropoids, and for catarrhines (see above).

78. *Pectoralis major has no clavicular origin (L 4, CI 25, RI 57).* [**0**] In non-primate taxa as, e.g. *Tupaia*, *Rattus* and *Cynocephalus* and primates such as *Lemur*, *Propithecus*, *Tarsius* and *Colobus* (e.g. Burmeister, 1846; Murie & Mivart, 1872; Barnard, 1875; Polak, 1908; Woollard, 1925; Jouffroy, 1962; Jouffroy, 1975; Ashton & Oxnard, 1963; our dissections) and hominoids other than orangutans, the pectoralis major is usually at least partially originated from the clavicle (in a few specimens of these genera of CS-0, e.g. in two of the gorillas dissected by Preuschoft, 1965; there is no bony origin from the clavicle, but these cases are a rare anomaly within these genera). Some authors (e.g. George, 1977) stated that in *Tupaia* the pectoralis major does not originate from the clavicle, but this is because the clavicular head of this muscle is usually deeply blended to the deltoid complex and is thus not often considered to be a part of the pectoralis major: in the *Tupaia* specimens dissected by Jouffroy (1962) and by us, as well as in other tree-shrews such as *Ptilocercus* (e.g. Le Gros Clark, 1926), part of the pectoralis major does originate from the clavicle. [**1**] In *Loris, Nycticebus*, *Aotus*, *Callithrix*, *Saimiri*, *Macaca*, *Cercopithecus* and *Pongo*, however, there is usually no clavicular origin of the pectoralis major. According to Mivart & Murie (1865), Murie & Mivart (1872), Barnard (1875), Huntington (1903), Tschachmachtschjan (1912), Beattie (1927), Campbell (1937), Miller (1943), Ashton & Oxnard (1963), Dunlap et al. (1985), and our dissections in *Loris, Nycticebus*, *Aotus*, *Callithrix*, and *Saimiri* the pectoralis major is partially originated from the sternoclavicular joint, but not directly from the clavicle, although Schroeder van der Kolk & Vrolik (1851) stated that a clavicular origin might be found in '*Stenops*' (which, at that time, included species that are now assigned to both *Loris* and *Nycticebus*). The lack of a clavicular origin is also found in *Macaca* according to Howell & Straus (1933), Patterson (1942), Matsuo (1959) and our dissections, although a few specimens of this genus might have a partial origin from the clavicle as reported by Tschachmachtschjan (1912). In *Cercopithecus* there is usually no clavicular origin of the pectoralis major, as noted by Hill (1966) and corroborated by our dissections. Some authors (e.g. Church, 1861–1862; Sonntag, 1924a; Ashton & Oxnard, 1963; Andrews & Groves, 1976) described a very small clavicular origin of the pectoralis major in orangutans, but most authors (e.g. Chapman, 1880; Hartmann, 1886; Hepburn, 1892; Beddard, 1893; Fick, 1895a,b; Primrose, 1899, 1900; Michaëlis, 1903; Sullivan & Osgood, 1927; Stewart, 1936; Kallner, 1956; Stern et al. 1980a) agree that usually in orangutans usually there is no clavicular origin of the pectoralis major, and this was corroborated by our dissections of *Pongo*). In the two *Pithecia* specimens dissected by Ashton & Oxnard (1963) and in two of the five specimens dissected by Ziemer (1972) there was no clavicular origin, but in the other three specimens dissected by Ziemer (1972) there was a clavicular origin, and such an origin was seemingly also found in at least one side of the *Pithecia* GWUANT PP1 specimen dissected by us (but not on the only – right – side that we dissected in the *Pithecia* VU PP1 specimen); therefore, this genus is coded as '?'. Champneys (1872), MacDowell (1910) and Hill (1970) have reported the presence of a few fibers originating from the clavicle in two specimens of *Papio cynocephalus* and *P. anubis*, but in the specimens of this genus dissected by Hill (1970), the specimens of *P. anubis* dissected by Huntington (1903) and by Swindler & Wood (1973), of *P. papio* dissected by Michaëlis (1903), and of *Papio* sp. dissected by Ashton & Oxnard (1963), there was no bony origin from the clavicle. As in the *P. anubis* dissected by us there was a partial insertion from the clavicle, it is difficult to discern what is the usual condition for *Papio*; this genus is thus coded as '?'.

79. *'Pectoralis tertius' a distinct muscle (L 1, AUTAPOMORPHY).* [**0**] Plesiomorphically in mammals there is usually no 'pectoralis tertius' (this structure, which is also named as 'xiphiuhumeralis', corresponds to part of the 'entopectoralis' *sensu* Lander, 1918). [**1**] As described by Greene (1935) and corroborated by our dissections, in *Rattus* there is a distinct 'pectoralis tertius', which usually runs from the xiphoid process to the coracoid process of the scapula. It should be noted that Huntington (1903) described an 'intermediate entopectoralis slip' in one specimen of *Callithrix jacchus*, which could possibly be homologous to the 'pectoralis tertius' of rats. However, the presence of this structure in *Callithrix* clearly seems to constitute an anomaly, and this genus is thus coded as CS-0 (e.g. Beattie, 1927; Ashton & Oxnard, 1963; Dunlap et al. 1985; our dissections).

80. *Pectoralis major inserts onto the coracoid process (L 1, AUTAPOMORPHY).* [**0**] In non-primate taxa such as *Rattus*, *Tupaia* and *Cynocephalus* and in most primates the pectoralis major (including its abdominal head) inserts mainly onto the proximal region of the humerus and surrounding structures and not onto the coracoid process of the scapula. Hill (1970) stated that in *Papio* the 'pectoralis abdominis' (which corresponds to the abdominal head of the pectoralis major *sensu* the present work) usually inserts onto the coracoid process of the scapula, but in all the *Papio* specimens dissected by other authors (e.g. Huntington, 1903; MacDowell, 1910; Swindler & Wood, 1973) and by us this structure clearly inserts onto the humerus and not onto the coracoid process. [**1**] As described by Hartmann (1886), Stewart (1936), Raven (1950) and Preuschoft (1965), and corroborated by our dissections, in *Gorilla* the abdominal head of the pectoralis major is usually at least partially inserted onto the coracoid process.

81. *Pectoralis major is blended with the biceps brachii (L 2, CI 50, RI 0).* [**0**] In non-primate taxa such as *Rattus*, *Tupaia* and *Cynocephalus* and in most primates the pectoralis major is usually not blended with the biceps brachii. [**1**] In *Gorilla* (according to, e.g. Deniker, 1885; Duckworth, 1898; Miller, 1932; Stewart, 1936; Raven, 1950 and Preuschoft, 1965; but not to our dissection of VU GG1) and *Hylobates* (e.g. Kohlbrügge, 1890–1892; Ruge, 1890–1891; Miller, 1932; Howell & Straus, 1932; Andrews & Groves, 1976; Jungers & Stern, 1981; Payne, 2001; Michilsens et al. 2009; our dissections) the abdominal head of the pectoralis major is usually blended with the biceps brachii.

82. *Pectoralis major has a pars capsularis in at least some specimens (L 1, CI 100, RI 100).* As noted by Campbell (1937) and Ziemer (1972), contrary to taxa of CS-0 [**0**], in at least some specimens of various platyrrhine genera, including *Aotus*, *Saimiri* and *Pithecia* [**1**], there is a distinct pars capsularis of the pectoralis major, which lies laterally to the main body of the

muscle and, at least in some members of *Pithecia* according to Ziemer (1972) and to our dissections, is separated from this main body by the cephalic vein. The pars capsularis inserts mainly onto the gleno-humeral capsule (thence the name pars capsularis: e.g. fig. 22 of Ziemer, 1972) and the delto-pectoral crest of the humerus. According to Campbell (1937), this pars capsularis was apparent to some extent in all the numerous platyrrhines dissected by him (including *Aotus* and *Saimiri*), being more evident in *Aotus*, *Saimiri* and *Alouatta*. The pars capsularis was present as a distinct structure on one side of a *Pithecia* specimen dissected by Ziemer (1972) and was seemingly also present in at least one side of our *Pithecia* GWUANT PP1 specimen. As Campbell (1937) and Ziemer (1972) did not refer to *Callithrix*, it is not clear if the pars capsularis that they found in other New World monkeys is present, or not, in at least some specimens of this taxon, although in the descriptions of Huntington (1903) and Beattie (1927) they do not refer to this structure (but the works of these latter authors did also not address in detail the presence/absence of this particular structure). We could not find this structure in the *Callithrix* GWUANT CJ1 specimen dissected by us. Therefore, until more information is available *Callithrix* is coded as '?'.

83. *Pectoralis minor inserts onto the coracoid process (L 6, CI 16, RI 28).* [**0**] Plesiomorphically in mammals the pectoralis minor attaches mainly onto the proximal region of the humerus and/or surrounding structures, and does not insert directly onto the coracoid process of the scapula; this configuration is found in monotremes and in numerous other non-primate mammals, including *Tupaia* (e.g. Diogo et al. 2009a). It is also usually found in *Lemur*, *Propithecus*, *Loris, Nycticebus* and *Tarsius* according to, e.g. Vrolik (1841), Burmeister (1846), Cuvier & Laurillard (1849), Mivart & Murie (1865), Murie & Mivart (1872), Barnard (1875), Huntington (1903), Lander (1918), Woollard (1925), Miller (1943), Jouffroy (1962), Jouffroy (1975), Ashton & Oxnard (1963), Schultz (1984) and our dissections, although, contrary to other authors, Tschachmachtschjan (1912) described an insertion of the pectoralis minor onto both the shoulder joint capsule and the coracoid process in a specimen of *Loris tardigradus* and a specimen of *Lemur catta*. In the five *Pithecia* specimens dissected by Ziemer (1972) and the GWUANT PP1 and VU PP1 *Pithecia* specimens dissected by us the insertion was always onto the humerus and shoulder capsule, although a partial insertion onto the coracoid process was reported in two *Pithecia* specimens by Ashton & Oxnard (1963) and a *Pithecia* specimen by Barnard (1875); in overall, there was no insertion onto this process in seven out of 10 *Pithecia* specimens, and this taxon is coded as CS-0. A partial insertion onto the coracoid process was described in a specimen of *Callithrix penicillata* by Barnard (1875) and five specimens of *Callithrix* sp. by Ashton & Oxnard (1963), but in the *Callithrix jacchus* specimens reported by Windle (1886a,b; one specimen), Huntington (1903; one specimen), Lander (1918; one specimen), Beattie (1927; 14 specimens), and dissected by us (GWUANT CJ1: one specimen) there was no direct insertion onto the coracoid process; so, overall, there was no insertion onto this process in 18 out of 24 *Callithrix* specimens, and this taxon is coded as CS-0. There is also usually no attachment onto the coracoid process in *Cercopithecus* (e.g. Hill, 1966; our dissections) and in *Colobus* (within the specimens dissected by Polak, 1908), the two specimens dissected by Ashton & Oxnard, 1963) and the specimen dissected by us, a partial insertion onto the coracoid process was only found in one of the specimens described by Ashton & Oxnard, 1963; although in other Colobinae the insertion usually extends to this process according to Schultz, 1986). In some of the *Pan* described by Gratiolet & Alix (1866), Humphry (1867), Macalister (1871), Barnard (1875), Hartmann (1886), Beddard (1893), Lander (1918), Miller (1952) and Andrews & Groves (1976) and dissected by us, some fibers of the pectoralis minor may insert onto the coracoid process, but even in these cases the great majority of the fibers of this muscle insert onto other structures such as the shoulder capsule. Moreover, in the *Pan* specimens described by most authors (e.g. Wyman, 1855; Huxley, 1864; Broca, 1869; Champneys, 1872; Chapman, 1879; Sutton, 1883; Hepburn, 1892; MacDowell, 1910; Sonntag, 1923, 1924b; Miller, 1932; Ziegler, 1964; Swindler & Wood, 1973) there is no attachment at all onto the coracoid process (interestingly, in a few *Pan* specimens, such as one specimen described by Wilder (1862), the pectoralis minor does insert onto the coracoid process on one side of the body, while on the other side of the body it inserts onto the greater tuberosity of the humerus instead). In summary, it can be said that the usual condition for *Pan* is that in which there is no direct attachment onto the coracoid process, so this taxon is coded as CS-0 (according to Ashton & Oxnard, 1963; in 76% of *Pan* there is effectively no insertion onto the coracoid process). [**1**] In *Rattus* and *Cynocephalus* (e.g. Greene, 1935; our dissections) as well as in *Aotus*, *Saimiri*, *Hylobates*, *Pongo*, *Gorilla* and modern humans the pectoralis minor is at least partially inserted onto the coracoid process. A partial insertion onto this process was found in *Aotus* and *Saimiri* by Campbell (1937), Ashton & Oxnard (1963) and by us. This is also the common condition for hylobatids, as stated by Bischoff (1870), Deniker (1885), Kohlbrügge (1890–1892), Andrews & Groves (1976) and Michilsens et al. (2009) and corroborated by our dissections, and according to Ashton & Oxnard (1963) this is also the case in 75% of orangutans and all gorillas. In the orangutans dissected by us there was an insertion onto the coracoid process, and such an insertion was also reported in orangutans by Hartmann (1886), Hepburn (1892), Fick (1895a,b), Kohlbrügge (1897), Sonntag (1924a), Sullivan & Osgood (1927) and Kallner (1956), and found in the gorillas described by Macalister (1873), Barnard (1875), Deniker (1885), Hartmann (1886), Hepburn (1892), Stewart (1936), Raven (1950), and Preuschoft (1965), and dissected by us. Within different species of *Macaca* there seems to be a remarkable variation of this feature, so until we obtain more data, we prefer to code this genus as '?'. For instance, Ashton & Oxnard (1963) showed how in all of the specimens of some species of this genus, e.g. *M. mulatta*, there is no insertion onto the coracoid process, while in all of the specimens of species such as *M. cyclopis* there is a partial insertion onto this process. Howell & Straus (1933) stated that in *M. mulatta* there is effectively no insertion onto the coracoid process, and Lander (1918) states that in *M. nemestrina* there is also no insertion onto this process, while a partial insertion onto this process was reported by Haughton (1865) in *M. nemestrina*, by Barnard (1875) in *M. fascicularis,* by Patterson (1942) in *M. nigra*, and by Matsuo (1959) in *M. cyclopis*. Regarding *Papio*, there is no insertion onto the coracoid process in the specimens of *P. anubis* dissected by Lander (1918) and Swindler & Wood (1973; insertion only onto capsule of shoulder joint), of *P. hamadryas* dissected by Miller (1932; insertion only onto 'coracoid ligaments'), and of *Papio* sp. Dissected by Ashton & Oxnard (1963; insertion only onto capsule of shoulder joint and humerus). However, Champneys (1872) described an insertion onto both the coracoid process and humerus in one specimen of *P. anubis*, and, his review of

the myology of *Papio*, Hill (1970: p. 106) stated that in this genus the insertion of the pectoralis minor is 'invariably on to the coracoid process'. It should however be noted that, as explained above, Hill (1970) stated that in *Papio* the 'pectoralis abdominis' (i.e. the abdominal head of the pectoralis major *sensu* the present work), also inserts onto the coracoid process of the scapula, but the descriptions of *Papio* provided by all other authors (e.g. Huntington, 1903; MacDowell, 1910; Swindler & Wood, 1973), as well as our dissections, clearly show that in *Papio* the 'pectoralis abdominis' usually inserts onto the humerus, and not onto the coracoid process. Therefore, it is possible that Hill (1970) had made some confusion and thus that his statement regarding the insertion of the pectoralis minor onto the coracoid process is erroneous. However, we did find a partial insertion of the pectoralis minor in the *Papio* specimen dissected by us so, until more data is available on the taxonomic distribution of this feature within this genus, we code *Papio* as '?'.

84. *Pectoralis minor inserts onto the clavicle (L 1, AUTAPOMORPHY).* Contrary to taxa of CS-0 [**0**], in *Hylobates* [**1**] the pectoralis minor is often at least partially inserted onto the clavicle (this was corroborated by Hepburn, 1892; Sonntag, 1924b; Stewart, 1936; Gibbs, 1999; Michilsens et al. 2009; and by us, although such an insertion onto the clavicle was not reported in the fetal hylobatid specimen dissected by Deniker, 1885 and in the three hylobatid specimens examined by Kohlbrügge, 1890–1892).

85. *Panniculus carnosus is not a distinct muscle (L 2, CI 50, RI 80).* [**0**] Non-primate mammals such as *Cynocephalus*, *Rattus*, *Tupaia* as well as numerous non-hominoid primates, including *Lemur*, *Propithecus*, *Loris, Nycticebus*, *Tarsius*, *Aotus*, *Callithrix*, *Saimiri*, *Macaca*, *Colobus, Cercopithecus* and *Papio*, have a panniculus carnosus. [**1**] As described by Jouffroy (1971) and corroborated by our dissections, hominoids normally do not have a panniculus carnosus. This muscle was also missing in the five *Pithecia* specimens dissected by Ziemer (1972) and the two *Pithecia* specimens dissected by us, so *Pithecia* is coded as CS-1.

86. *Deltoideus is a single, continuous muscle (L 3, CI 33, RI 60).* [**0**] In most non-primate mammals the deltoideus complex is usually divided into a deltoideus scapularis and a deltoideus acromialis et clavicularis, the latter being sometimes further differentiated into two distinct muscles, the deltoideus acromialis and the deltoideus acromialis. In *Rattus*, as well as in various other rodents (e.g. Bryant, 1945; Jouffroy, 1971), there is usually a muscle deltoideus scapularis and a muscle deltoideus acromialis et clavicularis, which is often designated in the literature as 'acromiodeltoideus' or 'cleidobrachialis' (e.g. fig. 69 of Greene, 1935; fig. 2.3 of Walker & Homberger, 1997; our dissections). A similar configuration is usually found in dermopterans and in tree shrews such as *Tupaia* and *Ptilocercus* (e.g. fig. 5 of Kladetsky & Kobold, 1966; fig. 8 of Lecher 1886; George, 1977; our dissections). As explained by Parsons (1898b), Miller (1932) and Jouffroy (1971), and corroborated by our dissections, the deltoideus scapularis and the deltoideus acromialis et clavicularis are usually also present as distinct muscles in *Tarsius* (e.g. fig. 10.9 of Schultz, 1984) and *Lemur* (e.g. fig. 10 of Kladetsky & Kobold, 1966), as well as in at least some members of other strepsirrhine genera, including *Varecia* (e.g. fig. 26 of Jouffroy, 1962), *Galago* (e.g. fig. 7 of Stevens et al. 1977), and *Eulemur* (e.g. fig. 2 of pl. 32 of Huntington, 1897). It should be noted that the structure that was designated in these latter primate taxa as 'a pars superficialis of the infraspinatus' (e.g. by Burmeister, 1846; Woollard, 1925; and Schultz, 1984) clearly corresponds to the deltoideus scapularis *sensu* the present work, because (i) it is mainly originated from the scapular spine, (ii) it inserts onto the proximal portion of the humerus, including an area that is distal to the greater tuberosity according to Schultz (1984), and particularly because (iii) it is innervated by the axillary nerve, as described by this latter author. This is also corroborated by the detailed study of Kladetsky & Kobold (1966: e.g. their fig. 10). The structure that was named 'deltoideus' in *Tarsius*, by Burmeister (1846), Woollard (1925) and Schultz (1984), thus corresponds to the deltoideus acromialis et clavicularis *sensu* the present work. [**1**] As explained by Parsons (1898b), Miller (1932), and Jouffroy (1971), and corroborated by our dissections, in all the anthropoid primates included in this analysis, as well as in strepsirrhine primates such as *Propithecus* (e.g. Jouffroy, 1962; our observations; also in *Daubentonia* according to Jouffroy, 1962), *Loris* (e.g. Miller, 1943; our dissections) and *Nycticebus* (e.g. Miller, 1943; our observations), there is a single deltoideus muscle. That is, in these taxa the deltoideus scapularis is not present as a distinct, separate muscle, being instead partially (in those cases in which it constitutes the pars spinalis of the mainly undivided muscle deltoideus) or even completely (in those cases in which the muscle deltoideus is not divided) fused with the other portions of the deltoid complex.

87. *Teres minor is not a distinct muscle (L 1,AUTAPOMORPHY).* [**0**] In taxa of CS-0 the teres minor is usually present as a distinct muscle, although in some specimens of these genera it may be partially blended with the infraspinatus and/or other structures (for instance, in *Tarsius* the teres minor is blended with the infraspinatus in such a way that it is sometimes said to be missing – e.g. in the two specimens of Schultz, 1984 and one specimen of Woollard, 1925 – but in most specimens of this genus the teres minor is present as a distinct, although thin, muscle: e.g. in three specimens dissected by Woollard, 1925; Burmeister, 1846; Miller, 1932; and by us). [**1**] As described by Kladetsky & Kobold (1966), Jouffroy (1971), George (1977) and Schmidt & Schilling (2007), and corroborated by our dissections, in *Tupaia* the teres minor is almost always absent as a distinct structure, being probably fused with the infraspinatus and/or the deltoideus scapularis (e.g. Diogo et al. 2009a).

88. *Subscapularis has a distinct pars posterioris (L 1, AUTAPOMORPHY).* As noted by Kohlbrügge (1890–1892), Kanagasuntheram (1952–1954) and Andrews & Groves (1976) and corroborated by our dissections, contrary to taxa of CS-O [**0**], hylobatids [**1**] have a distinct, peculiar pars inferioris of the subscapularis, which is partially separated, medially, from the main, anterior portion of the muscle by a ridge of the scapula.

89. *Latissimus dorsi and teres major are fused (L 3, CI 33, RI 66).* [**0**] In various non-primate mammals (e.g. Jouffroy, 1971), including *Rattus* (e.g. Greene, 1935; our dissections) and *Cynocephalus* (e.g. Leche, 1866; Chapman, 1902; our dissections) the distal tendon of the latissimus dorsi passes mainly dorsal to (and is not fused with) the distal tendon of the latissimus dorsi. This is also the case in the dissected specimens of the non-catarrhine primate genera included in this cladistic analysis, and usually also the case in the members of these genera dissected by other authors (e.g. Schück, 1913a; Woollard, 1925; Beattie, 1927; Campbell, 1937; Miller, 1943; Jouffroy, 1962, 1975; Ashton & Oxnard, 1963; Ziemer, 1972; Dunlap et al. 1985). Contrary to the other catarrhines included in this analysis (see below), in *Gorilla*, *Pan* and *Homo* the distal tendon of the latissimus dorsi often passes also mainly dorsal to, and is not fused with, the distal

tendon of the latissimus dorsi. According to Gibbs' (1999) review of the literature, this latter configuration is actually found in 1/2 *Gorilla* (e.g. found by Stewart, 1936; but not by Raven, 1950; who described a partial fusion of the tendons), in 5/8 *Pan* (e.g. found by Ziegler, 1964; MacDowell, 1910; Stewart, 1936; and other authors, but not reported by Gratiolet & Alix, 1866; Sonntag, 1923; Miller, 1952; Hepburn, 1892; Champneys, 1872; and Dwight, 1895; who referred to a partial fusion of the tendons), and in the vast majority of modern humans. If we add Gibbs' (1999) numbers with the numbers found in our own dissections (no fusion of the distal tendons of the two muscles in the single gorilla dissected by us and in two of the five chimpanzees dissected by us) as in recent dissections by J. Potau (no fusion of the tendons in the two chimpanzee specimens dissected by him: personal communication), the total numbers are: no fusion in 2/3 *Gorilla* and in 9/15 *Pan*. Therefore, it can be said that, contrary to hylobatids and orangutans (see below), there is often no fusion in *Gorilla*, *Pan* and *Homo*. [**1**] In *Tupaia* (e.g. George, 1977; our dissections) as well as in the members of the Old World monkey genera included in the analysis that were dissected by us and by others (e.g. Polak, 1908; MacDowell, 1910; Howell & Straus, 1933; Patterson, 1942; Hill, 1966, 1970), the distal tendons of the latissimus dorsi and of the teres major are usually partially or completely fused to each other, at their insertions onto the humerus. This is also the case in the vast majority of hylobatids (corroborated by, e.g. Hepburn, 1892; Kohlbrügge, 1890–1892; Miller, 1932; Stewart, 1936; Michilsens et al. 2009; also corroborated by us, although in an adult *Hylobates lar* specimen recently dissected by S. Dunlap the tendons seemed to be somewhat separated: personal communication) and of orangutans (corroborated by, e.g. Hepburn, 1892; Church, 1861–1862; Barnard, 1875; Beddard, 1893; Primrose, 1899, 1900; Sonntag, 1924a; Sullivan & Osgood, 1927; Kallner, 1956; Ashton & Oxnard, 1963; Miller, 1932; Stewart, 1936; one of the few exceptions found in the recent literature concerns the work of Payne, 2001, who suggested that the distal tendons of the two muscles were not fused in the three orangutans dissected by her; the fusion between the tendons was also found in one adult *Pongo* specimen recently dissected by J. Potau, but the tendons were partially separated in a orangutan neonate recently dissected by S. Dunlap: personal communication).

Arm muscles

90. *Dorsoepitrochlearis has two distinct proximal heads originating from the latissimus dorsi and the teres major (L 1, AUTAPOMORPHY).* As described by Le Gros Clark (1924), Jouffroy (1962, 1971), Kladetsky & Kobold (1966) and George (1977) and corroborated by our dissections, contrary to taxa of CS-O [**0**], *Tupaia* (and *Ptilocercus* and other tree-shrews according to George, 1977) [**1**] has a peculiar configuration in which the dorsoepitrochlearis has two distinct proximal heads, one originating from the teres major and the other from the latissimus dorsi. [**-**] This character is inapplicable in modern humans because the dorsoepitrochlearis is usually not present as an independent muscle.

91. *Dorsoepitrochlearis is not a distinct muscle (L 1, AUTAPOMORPHY).* Contrary to taxa of CS-O [**0**], in *Homo* [**1**] the dorsoepitrochlearis is usually not present as a distinct muscle.

92. *Dorsoepitrochlearis does not insert onto the olecranon process of the ulna (L 1, CI 100, RI 100).* [**0**] In most non-primate eutherian mammals (e.g. Jouffroy, 1971), including *Rattus*, *Tupaia* and *Cynocephalus*, and in primates such as *Lemur*, *Propithecus*, *Loris, Nycticebus*, *Tarsius*, *Aotus*, *Callithrix*, *Pithecia*, *Saimiri*, *Macaca*, *Cercopithecus*, *Colobus* and *Papio*, the dorsoepitrochlearis is usually at least partially inserted onto the olecranon process of the ulna and/or the olecranon fascia. In *Rattus*, Greene (1935) reported an insertion onto the medial epicondyle of the humerus only, but more recent works such as Walker & Homberger (1997) described an at least partial insertion onto the olecranon process. In *Cynocephalus* and *Tupaia* (and also in other tree-shrews such as *Ptilocercus*), Leche (1886), Le Gros Clark (1924, 1926), Howell & Straus (1933), Jouffroy (1962) and George (1977) described an insertion onto the olecranon process. In all the *Lemur*, *Propithecus*, *Loris, Nycticebus* and *Tarsius* specimens reported by Burmeister (1846), Murie & Mivart (1872), Barnard (1875), Allen (1897), Schück (1913a), Woollard (1925), Miller (1932, 1943), Jouffroy (1962), Jouffroy (1975) and Schultz (1984) and dissected by us, there is also at least a partial insertion onto the ulna, although Ashton & Oxnard (1963) stated that in one specimen of *Propithecus* dissected by them the insertion was exclusively onto the medial epicondyle of the humerus and one specimen of *Nycticebus* dissected by them the insertion was onto the fascia covering the intermediate third of the triceps brachii. In some *Loris* and *Nycticebus* specimens the dorsoepitrochlearis is effectively mainly fused distally with the triceps brachii, being thus indirectly associated with the olecranon process via the tendon of this latter muscle, as reported by Miller (1943) and Hill (1953) and found in our *Loris tardigradus* SDZ LT53090 specimen. In the numerous specimens of *Aotus*, *Callithrix*, *Pithecia* and *Saimiri* dissected by Senft (1907), Beattie (1927), Hill (1957), Ashton & Oxnard (1963), Ziemer (1972) and by us, there is at least a partial insertion onto the olecranon process, although Barnard (1875) described an exclusive insertion onto the medial epicondyle of the humerus in a specimen of *Pithecia monachus* and a specimen of *Callithrix penicillata*. Barnard (1875) only refers to an attachment onto the medial epicondyle in *Macaca fascicularis*, but in the 10 specimens of this species dissected by Kimura & Tazai (1970) the muscle also attached on the olecranon process and in the *M. mulatta* specimen examined by us it mainly attached to this latter process, although it was also partially attached onto the medial epicondyle of the humerus. In the *M. mulatta* specimens dissected by Howell & Straus (1933) the muscle inserted onto both the medial epicondyle and the olecranon fascia, in the 103 *M. cyclopis* upper limbs dissected by Hadano (1955) it extended to the ulna, in the specimen of *M. nigra* described by Patterson (1942) it inserted onto the ulna, and in the reviews of Aiello & Dean (1990) and Andrews & Groves (1976) it is clearly stated that in Old World monkeys the insertion usually includes the olecranon process of the ulna and/or olecranon fascia. Similarly, although Hill (1970) only mentioned its attachment onto the medial epicondyle of the ulna in *Papio*, this muscle is actually at least partially attached to the ulna in the vast majority of the members of this genus, as described and clearly illustrated in *P. anubis* by Swindler & Wood (1973) and described in *P. hamadryas* by Miller (1932), in *P. cynocephalus* by MacDowell (1910), and in *Papio* sp. by Ashton & Oxnard (1963), and also corroborated in our dissections of *P. anubis*. In *Cercopithecus* the muscle also goes to the olecranon process of the ulna (e.g. Miller, 1932; Hill, 1966; our dissections) and this is also the case in *Colobus* and other Colobinae (e.g. Polak, 1908; Ashton & Oxnard, 1963; Schultz, 1986; our dissections). [**1**] As noted by Aiello & Dean (1990), in non-human hominoids the dorsoepitrochlearis is

usually mainly attached onto the medial epicondyle, the intermuscular septum and/or other surrounding structures, but not onto the olecranon process or the olecranon fascia. Regarding *Hylobates*, Barnard (1875), Kohlbrügge (1890–1892), Chapman (1900), Schück (1913a), Miller (1932), Ashton & Oxnard (1963), Andrews & Groves (1976), Jungers & Stern (1981) and Michilsens et al. (2009) found a bony insertion onto the medial epicondyle of the humerus, as we did, while Payne (2001) refers to an insertion onto the distal humerus just proximal to the medial epicondyle; on one side of the fetal gibbon dissected by Deniker (1885) there was an insertion onto the aponeurosis of the arm only, as found in *H. moloch* by Bischoff (1870), but on the other side of that fetus the insertion extended to the medial epicondyle of the humerus. Concerning *Pongo*, Barnard (1875) and Fick (1895a,b) found an insertion onto the medial epicondyle and intermuscular septum, Chapman (1880), Beddard (1893), Primrose (1899, 1900), Michaëlis (1903), Sonntag (1924a), Sullivan & Osgood (1927), Miller (1932), Andrews & Groves (1976) found an insertion onto the medial epicondyle only, as we did, while Schück (1913a) refers to a bony insertion onto the humerus, Hepburn (1892) and Ashton & Oxnard (1963) to the intermuscular septum, and only Church (1861–1862) refers to a bony insertion onto the olecranon process of the ulna. With respect to *Gorilla*, most authors (e.g. Duvernoy, 1855–1856; Barnard, 1875; Grönroos, 1903; Miller, 1932; Raven, 1950; Preuschoft, 1965) found a bony insertion onto the medial epicondyle only, as we did. Regarding *Pan*, Tyson (1699), Gratiolet & Alix (1866), Barnard (1875), Hartmann (1886), Beddard (1893), Dwight (1895), MacDowell (1910), Schück (1913a), Sonntag (1923), Miller (1932, 1952), Swindler & Wood (1973), and Payne (2001) found a bony insertion onto the medial epicondyle only, as we did, while Ashton & Oxnard (1963) referred to the medial epicondyle and supracondylar ridge of the humerus, and only very few authors, e.g. Vrolik (1841), Testut (1883), Grönroos (1903) and Ziegler (1964), described a bony insertion onto both the medial epicondyle and olecranon process of the ulna. According to the literature review done by Gibbs (1999), the usual condition for *Pan* is effectively that in which there is a bony insertion onto the medial epicondyle only). [-] This character is inapplicable in modern humans because the dorsoepitrochlearis is usually not present as an independent muscle.

93. *Dorsoepitrochlearis is blended with the biceps brachii (L 1, AUTAPOMORPHY).* Contrary to taxa of CS-O [**0**], in *Hylobates* [**1**] the dorsoepitrochlearis is usually deeply blended with the short head of the biceps brachii, as noted by Howell & Straus (1932), Andrews & Groves (1976), Jungers & Stern (1980, 1981) and Michilsens et al. (2009), and corroborated by our dissections.

94. *Strong fascial connection between the dorsoepitrochlearis and the subscapular fascia and/or the scapula is present (L 1, CI 100, RI 100).* As noted by Dunlap et al. (1985), although a few specimens of taxa of CS-0 [**0**] may occasionally have fascial connections between the dorsoepitrochlearis, the subscapular fascia and/or the scapula (e.g. one chimpanzee reported by Gratiolet & Alix, 1866; and one gorilla described by Raven, 1950), the peculiar, strong fascial connection between these structures that was described Dunlap et al. (1985) is only consistently found in New World monkeys, including *Aotus*, *Callithrix*, *Pithecia* and *Saimiri* [**1**] (e.g. their fig. 2). Such a peculiar, strong fascial connection was found by us in specimens of these genera and also reported in these genera and in various other platyrrhines by Campbell (1937), Ashton & Oxnard (1963) and Dunlap et al. (1985), although Ziemer (1972) only reported such a peculiar, strong fascial connection in one of the 10 limbs of *Pithecia monachus* that she dissected.

95. *Long head of triceps brachii is divided into a thinner, deep bundle and a broader, superficial bundle (L 1, AUTAPOMORPHY).* Contrary to taxa of CS-0 [**0**], in *Papio* [**1**] the long head of the triceps brachii is often peculiarly differentiated into a thinner, deep (ventral) bundle and a broader, superficial (dorsal) bundle, as described in *P. cynocephalus* by MacDowell (1910) and corroborated by our dissections of *P. anubis*.

96. *Triceps brachii has a posterior head (L 3, CI 33, RI 60).* [**0**] In numerous non-primate mammals (e.g. Jouffroy 1971; including *Rattus* and *Cynocephalus;* e.g. Leche, 1886; Greene, 1935; our dissections), as well as in all anthropoids included in the present analysis, the triceps brachii is usually only differentiated into three main divisions (i.e. a long head, a lateral head, and a medial head, although some of this divisions may sometimes be partially differentiated into bundles, as is the case, for instance, in *Colobus* – lateral head may be partially subdivided into distal and proximal bundles, as described by Polak, 1908 and corroborated by our dissections – in *Cercopithecus* – lateral head may be partially divided into distal and proximal bundles and medial head may also be partially divided into two bundles, as described by Hill, 1966 and in *Papio* – see character above). [**1**] However, in tree shrews such as *Tupaia* and primates such as *Lemur*, *Propithecus*, *Loris, Nycticebus* and *Tarsius* the triceps brachii has a lateral head, a medial head, a long head, and also a distinct, peculiar posterior head. It should be noted that Le Gros Clark (1924) described one long head, one medial head and 'superficial and deep subdivisions of the lateral head' in *Tupaia*, and argued that the 'superficial subdivision of the lateral head' corresponds to the posterior head of non-anthropoid primates while the 'deep subdivision of the lateral head' corresponds to the lateral head of non-anthropoid and anthropoid primates. Le Gros Clark (1926) described one long head, one medial head and 'three subdivisions of the lateral head' in the tree-shrew *Ptilocercus*, while George (1977) described one long head, one 'medial head' subdivided into superficial and deep subdivisions and one 'lateral head' subdivided into superficial and deep subdivisions in *Tupaia*. Our dissections of *Tupaia* agree with the descriptions of George (1977) and indicate that the two bundles of the 'medial head' *sensu* this author probably correspond to the medial head and the posterior head of non-anthropoid primates (thus indicating that the posterior head of primates derives from the medial head, and not from the lateral head as proposed by Le Gros Clark, 1924). Regarding *Lemur*, *Propithecus*, *Loris, Nycticebus* and *Tarsius*, the posterior head was described by Murie & Mivart (1872) and Miller (1932, 1943; who designated it as 'anconeus sextus'), Owen (1868) and Barnard (1875; who called it 'distinct or extra fasciculus'), Woollard (1925) and Jouffroy (1962, 1971; who called it 'inferior or lower part of the median head') and Schultz (1984; who called it 'caput accessorium'). In the *Lemur*, *Propithecus* and *Tarsius* specimens, as well as in the *Nycticebus* SDZ NC43129 specimen, dissected by us we did found a distinct, well differentiated posterior head, which effectively seems to derive from the medial head of the triceps brachii (note: we could not discern this feature in the dissected *Loris* specimen).

97. *Long head of triceps brachii originates from half or more than half of the lateral border of the scapula (L 3, CI 33, RI 60).* [**0**] In non-primate taxa such as *Rattus*, *Tupaia* and *Cynocephalus*, as well as primates such as *Lemur*, *Propithecus*, *Loris,*

Nycticebus, *Tarsius*, *Pithecia*, *Callithrix*, *Saimiri*, *Aotus*, *Hylobates* and modern humans the long head of the triceps brachii usually originates from less than half of the lateral border of the scapula. Greene (1935) reported an origin from 1/3 of this border in *Rattus*, and Leche (1886) showed an origin from 1/3 of the border in *Cynocephalus*. Le Gros Clark (1924) referred to an origin from only the infraglenoid tubercle of the scapula in *Tupaia*, while George (1977) and Kladetsky & Kobold (1966) showed an origin from about 1/3 of the lateral border of the scapula in other *Tupaia* and other tupaids. In *Lemur*, *Propithecus*, *Loris, Nycticebus* and *Tarsius* the origin is from less than 1/2 of this border, as found by Burmeister (1846), Murie & Mivart (1872), Woollard (1925), Miller (1932, 1943), Jouffroy (1962), Jouffroy (1975), Schultz (1984), and by us. This is also the case in *Pithecia* according to Ziemer (1972) and to our dissections, in *Callithrix* according to the illustrations of Senft (1907) and to our observations, and in *Aotus* and *Saimiri* according to our dissections, although Campbell (1937) reported an origin from the lateral 1/2 of the lateral border of the scapula in these two latter genera. Regarding *Hylobates*, Kohlbrügge (1890–1892) and Loth (1931) reported 1/3, and we also found 1/3, and Gibbs refers to 1/3 to 1/2, so the usual condition seems to be less than 1/2. In modern humans the origin is usually mainly from the infraglenoid tubercle of the scapula, as described by Loth (1931) and Gibbs (1999). [**1**] In primates such as *Macaca*, *Colobus*, *Cercopithecus*, *Papio*, *Pongo*, and *Pan* the long head usually originates from half or more than half of this border, as noted by Loth (1931). This is the case in *Colobus*, as described by Polak (1908) and found by us (in other Colobinae such as *Procolobus* it originates from the lateral 2/3 of this border as noted by Schultz, 1986). In *Cercopithecus* it originates from about the lateral 1/2 of the lateral border as noted by Hill (1966) and corroborated by us. In *Macaca* species, e.g. *M. mulatta* (1/2 according to Howell & Straus, 1933), *M. fascicularis* (2/3 according to Kimura & Tazai, 1970 and 1/2 according to our dissections) and *M. nigra* (1/2 according to Patterson, 1942) the origin is usually from 1/2 or even 2/3 of the lateral border, although in one species of this genus, *M. cyclopis*, it was reported to be about 1/3 by Hadano (1955). In *Papio* the origin is from about 1/2 of the lateral border, as reported by Miller (1932), Hill (1970) and Swindler & Wood (1973) and corroborated by us. In *Pongo* Sonntag (1924a), Sullivan & Osgood (1927), Loth (1931), and Gibbs (1999) refer to 1/2, we also found 1/2, and Primrose (1899, 1900) refers to 2/3. Concerning *Pan*, Loth (1931), Ziegler (1964) and Swindler & Wood (1973) refer to 1/2, we also found 1/2 in the specimens examined by us (except in the PFA 1077 and PFA unc. infants, which were about 1/2.7), and Gratiolet & Alix (1966) referred to the whole lateral border; only Sonntag (1923 referred to 1/4). Regarding *Gorilla*, Loth (1931) and Preuschoft (1965) state that the long head originates from the distal 1/2 of the lateral border of the scapula, and Gibbs (1999) refers to the distal 1/3 to 1/2 of this border; however, in the gorilla specimen in which we could analyze this in detail (VU GG1) the origin was only from the distal 5 cm (of the total (18 cm) of the lateral border of the scapula, i.e. it was from less than 1/3 of this border. Therefore, until more information is available, *Gorilla* is coded as '?'.

98. *Strong fascial connection between the triceps brachii and the scapular spine and/or the axillary region is present (L 3, CI 33, RI 66).* As noted by Dunlap et al. (1985), although a few specimens of taxa of CS-0 [**0**] may occasionally have fascial connections between the triceps brachii and the scapular spine and/or the axillary region, the peculiar, strong fascial connection between these structures that was described by these authors is only consistently found in a few primates [**1**], including, among others, the New World monkeys *Aotus*, *Callithrix* and *Saimiri* (e.g. their fig. 2). Such a peculiar, strong fascial connection was found by us in specimens of these three genera as well as of *Pithecia*, and was also reported in specimens of these three genera and of various other platyrrhines by Campbell (1937), Hill (1962), Ashton & Oxnard (1963), Grand (1968) and Dunlap et al. (1985), although Ziemer (1972) did not report a strong fascial connection in the ten limbs of *Pithecia monachus* dissected by her. We also found a strong fascial connection between the triceps brachii and the scapular spine in the *Nycticebus*, *Loris* and *Lemur* specimens dissected by us, i.e. in all strepsirrhines dissected by us with exception to the dissected *Propithecus* specimen; therefore, *Loris*, *Nycticebus* and *Lemur* are also coded as CS-1.

99. *Brachialis does not originate from the surgical neck of the humerus (L 3, CI 33, RI 60).* [**0**] In non-primate taxa such as *Rattus* and *Tupaia* the origin of the brachialis usually extends, proximally, to the surgical neck of the humerus, as described by Le Gros Clark (1924), Greene (1935) and George (1977) and corroborated by our dissections. This is also the case in *Lemur*, *Propithecus* and *Tarsius* (e.g. Murie & Mivart, 1872; Howell & Straus, 1932; Jouffroy, 1962; Jouffroy, 1975; Schultz, 1984; our dissections). [**1**] In *Loris* and *Nycticebus* (e.g. Howell & Straus, 1932; Miller, 1943; our dissections), as well as in *Cynocephalus*, *Callithrix*, *Pithecia*, *Saimiri*, *Aotus*, *Papio*, *Colobus*, *Cercopithecus*, *Hylobates*, *Pongo*, *Gorilla*, *Pan* and modern humans the origin of the brachialis usually does not extend (i.e. it is distal) to the surgical neck of the humerus (our dissections and literature reviewed by us). According to Howell & Straus (1933), in *Macaca mulatta* the origin is usually, but not always, distal to the neck of the humerus, and this configuration was also found in the *M. fascicularis* specimen dissected by us; however, an insertion onto the humeral neck was reported in 91 of the 103 *M. cyclopis* upper limbs dissected by Hadano (1955). Therefore, until more information is available for *Macaca*, we code this genus as '?'.

100. *Biceps brachii has no short head (L 1, CI 100, RI 100).* [**0**] Both short and long heads of biceps brachii are present. [**1**] In *Loris* and *Nycticebus*, but not in the also lorisiform genus *Perodicticus*, the short head is usually missing (it was reported to be missing in *Loris* and *Nycticebus* by, e.g. Meckel, 1820–1838; Schroeder van der Kolk & Vrolik, 1851; Mivart & Murie 1865, Murie & Mivart, 1872; Miller, 1943 and Hill, 1953; although the illustrations of Cuvier & Laurillard, 1849 show what appears to be a short head in a *Loris* specimen; the short head was missing in the *Nycticebus* and *Loris* specimens dissected by us).

101. *Short and long heads of biceps brachii are completely separated (L 1, AUTAPOMORPHY).* [**0**] Short and long heads of biceps brachii at least partially blended distally. [**1**] As noted by Howell & Straus (1932) and Miller (1932), and corroborated by our dissections, in *Tarsius* these two heads are often (but not always, e.g. Woollard, 1925) entirely separated. [-] Inapplicable in *Loris* and *Nycticebus*, because the short head of the biceps is usually missing.

102. *Short head of biceps brachii originates from the humerus (L 1, AUTAPOMORPHY).* [**0**] The short head of biceps brachii usually originates from the scapula. [**1**] As noted by Owen (1868), Bischoff (1870), Kohlbrügge (1890–1892), Hepburn

(1892), Chapman (1900), Sonntag (1924a), Howell & Straus (1932), Miller (1932), Jouffroy (1971), Andrews & Groves (1976), Jungers & Stern (1981), Gibbs (1999) and Michilsens et al. (2009) and corroborated by our dissection of HU HL1, in *Hylobates* the short head of the biceps brachii is usually at least partially originated from the humerus, although in our VU HG1 specimen this head was exclusively originated from the coracoid process. It should be noted that Howell & Straus (1932) and Campbell (1937) described 'additional humeral heads of the biceps brachii' in taxa such as *Ateles*, *Aotus* and *Homo*, but these structures are not homologous to the short head of the biceps brachii, and, moreover, they represent anomalies/variants, and not the usual condition for these latter genera. [-] Inapplicable in *Loris* and *Nycticebus*, because the short head of the biceps is missing.

103. *Biceps brachii is blended with the flexor digitorum superficialis (L 1, AUTAPOMORPHY).* [**0**] Biceps brachii not deeply blended with flexor digitorum superficialis. [**1**] As described by Kohlbrügge (1890–1892), Howell & Straus (1932), Andrews & Groves (1976), Jungers & Stern (1981), Gibbs (1999) and Michilsens et al. (2009) and corroborated by our dissections, in *Hylobates* the distal portion of the biceps brachii is deeply blended with the proximal portion of the flexor digitorum superficialis.

104. *Biceps brachii does not insert onto the ulna (L 2, CI 50, RI 50).* [**0**] In numerous non-primate mammals (e.g. Howell & Straus, 1932; Jouffroy (1971), including taxa such as *Cynocephalus* and *Tupaia*, the biceps brachii usually inserts directly onto both the ulna and the radius. Regarding *Cynocephalus*, Leche (1886) seems to suggest that the insertion is only onto the radius, but in our dissections the muscle clearly inserts directly onto both the radius and the ulna. Concerning *Tupaia*, Le Gros Clark (1924) describes an insertion onto the radius only, as Le Gros Clark (1926) did for *Ptilocercus*, and this description is followed by Jouffroy (1971), who states that tupaids have an insertion onto the radius only, as most primates have. However, in five out of the six *Tupaia glis* specimens examined by Kladetsky & Kobold (1966) there is a direct insertion on both the ulna and the radius (in the other specimen the only bony insertion was onto the radius), and in the tree-shrews analyzed by George (1977), which also include *Tupaia*, he also found a direct insertion onto these two bones, as we did in our dissections of *Tupaia*. [**1**] As noted by Howell & Straus (1932) and Jouffroy (1971), in the vast majority of primates, including all the genera included in the present analysis, the biceps brachii usually inserts directly onto the radius, but not onto the ulna (this was corroborated by our dissections). A similar condition (i.e. an exclusive insertion onto the radius) is also found in the rats described by Greene (1935) and Walker & Homberger (1997) and dissected by us.

105. *Biceps brachii has no bicipital aponeurosis (L 4, CI 25, RI 57).* [**0**] In various non-primate mammals (e.g. Jouffroy, 1971), including taxa such as *Rattus*, as well as in various primates, including *Lemur*, *Propithecus* and hominoids such as *Hylobates*, *Gorilla*, *Pan* and modern humans, the biceps brachii is usually prolonged distally by a bicipital aponeurosis ('lacertus fibrosus' or 'lacertus carnosus') which is commonly associated with the fascia covering forearm muscles such as the pronator teres. Regarding *Rattus*, the bicipital aponeurosis is described by Greene (1935). This structure was also described by Jouffroy (1962) and found by us in *Lemur* and *Propithecus*. In *Hylobates*, the bicipital aponeurosis is usually present, as stated by Kohlbrügge (1890–1892), Loth (1931) and Jouffroy (1971) and corroborated by our dissections. In *Gorilla* the usual condition clearly seems to be that in which the bicipital aponeurosis is present, as described by Hartmann (1886), Sommer (1907), Pira (1913), Raven (1950) and Preuschoft (1965) and found by us, although this structure is seemingly lacking in a few specimens, such as the gorilla described by Owen (1868), and was not mentioned by Duvernoy (1855–1856). Regarding *Pan*, almost all, if not all, specimens have a bicipital aponeurosis, as reported by Gratiolet & Alix (1866), Sonntag (1923), Loth (1931), Howell & Straus (1932), Glidden & De Garis (1936), Miller (1952), Ziegler (1964), Swindler & Wood (1973) and corroborated by our dissections. [**1**] In *Cynocephalus*, *Tupaia*, *Loris, Nycticebus*, *Tarsius*, *Callithrix*, *Saimiri*, *Pithecia*, *Papio, Colobus, Cercopithecus* and *Pongo* the bicipital aponeurosis is usually not present as a distinct structure. Regarding *Cynocephalus*, Leche (1886) does not refer to a bicipital aponeurosis, and we did also not found this structure in our dissections. Concerning *Tupaia*, the bicipital aponeurosis was absent in all the specimens dissected by Le Gros Clark (1924), Jouffroy (1962), George (1977), by us, and in five out of the six *Tupaia* specimens examined by Kladetsky & Kobold (1966; and was also missing in the other tree-shrews analyzed by George, 1977 and in *Ptilocercus* according to Le Gros Clark, 1926). The bicipital aponeurosis is missing in *Loris* and *Nycticebus* according to Miller (1943) and Howell & Straus (1932), although these latter authors erroneously state, in their page 12, that this structure is present in *Nycticebus* (while in all the other parts of the ms they clearly report it to be absent in this taxon, as was effectively the case in our specimens of *Loris* and *Nycticebus*). This aponeurosis is also absent in *Tarsius* according to Woollard (1925), Howell & Straus (1932), Hill (1955), Schultz (1984), and to us, in *Callithrix*, *Pithecia* and *Saimiri* according to Senft (1907), Beattie (1927), Howell & Straus (1932), Hill (1957), Ziemer (1972) and to our dissections, in *Papio* to Howell & Straus (1932) and Swindler & Wood (1973) and to our observations, in *Cercopithecus* to Hill (1966) and to us, and in *Colobus* to Polak (1908) and to our observations. Regarding *Pongo*, most specimens, including those described by Fick (1895a,b), Sonntag (1924a), Sullivan & Osgood (1927) and Kallner (1956), and dissected by us, lack a bicipital aponeurosis, with exception of a few specimens, such as the orangutan described by Primrose (1899, 1900). Wood (1867a,b), Howell & Straus (1932, 1933), Patterson (1942), Jacobi (1966) and Kimura & Tazai (1970) stated that in *Macaca radiata*, *M. mulatta*, *M. fascicularis* and *M. nigra* the bicipital aponeurosis is almost always absent, and this structure was effectively absent in our dissections. However, Hadano (1955) stated that this structure is present in 101 of the 103 *M. cyclopis* specimens dissected by him, and suggested that its presence has been often neglected in *Macaca* by other authors. Therefore, until more information is available for *Macaca*, we prefer to code this genus as '?'. *Aotus* is also coded as '?', because Howell & Straus (1932) stated that in this taxon there is a bicipital aponeurosis, but in the *Aotus* specimen dissected by us this structure was absent.

106. *Bicipital aponeurosis (of biceps brachii) forms a 'lacertus carnosus' (L 1, AUTAPOMORPHY).* [**0**] Within those taxa with a bicipital aponeurosis, this structure usually forms a 'lacertus fibrosus' (i.e. it does not include fleshy muscular fibers). [**1**] As described by Kohlbrügge (1890–1892), Loth (1931) and Jouffroy (1971) and corroborated by our dissections, in *Hylobates* the bicipital aponeurosis is usually at least partially fleshy, thus forming a 'lacertus carnosus' between the main body of the biceps and the flexor muscles of the forearm (Sommer, 1907

stated that he also found some muscular fibers associated with the 'lacertus fibrosus' of the gorilla specimen dissected by him, but such muscular fibers were not found in the gorillas dissected by other authors and by us). *Macaca* and *Aotus* are coded as '?' (see character above). [-] This character is inapplicable in taxa that do not have a distinct bicipital aponeurosis.

107. *Coracobrachialis profundus is not present as a distinct head of the coracobrachialis (L 3, CI 33, RI 66).* [**0**] The plesiomorphic condition for eutherian mammals, found in *Cynocephalus* and *Tupaia*, is that in which the coracobrachialis proprius (or 'medius') and coracobrachialis profundus (or 'brevis) are present as distinct, separate structures, the coracobrachialis profundus being usually a short bundle running from the coracoid process to the proximal region of the humerus and often lying deep (dorsal) to the coracobrachialis proprius (e.g. Jouffroy, 1971; Diogo et al., 2009b). This condition is usually found in *Lemur*, *Propithecus*, *Loris, Nycticebus*, *Tarsius*, *Aotus*, *Callithrix*, *Saimiri*, *Macaca*, *Colobus*, *Cercopithecus* and *Papio*. In *Tupaia* the coracobrachialis profundus is present as a distinct structure, as described by Le Gros Clark (1924) and George (1977) and corroborated by our dissections. This is also the case in *Cynocephalus* as described by Leche (1886) and Macalister (1872) and corroborated by our dissections, and in *Lemur*, *Propithecus*, *Loris, Nycticebus* and *Tarsius* according to Burmeister (1846), Mivart & Murie (1865), Murie & Mivart (1872), Woollard (1925), Howell & Straus (1932), Miller (1932, 1943), Jouffroy (1962), Jouffroy (1975) and Schultz (1984), and to our dissections, although in the *Nycticebus pygmaeus* VU NP2 specimen and the *Loris tardigradus* SDZ LT53090 specimen dissected by us the caput profundum was missing. Both heads are usually present in *Aotus*, *Callithrix* and *Saimiri* according to Beattie (1927), Howell & Straus (1932), Campbell (1937), Hill (1957), Dunlap et al. (1985) and to our observations, although Kikuchi (2010a) stated that in the *Saimiri sciureus* specimen dissected by him there was no coracobrachialis profundus. The two heads are also usually present in *Macaca* according to Wood (1867a), Howell & Straus (1932, 1933), Patterson (1942), Hadano (1955), Jacobi (1966), Kimura & Tazai (1970), Jouffroy (1971), Kikuchi (2010a,b) and to our dissections, in *Cercopithecus* to Miller (1932) and Hill (1966) and to our observations, in *Colobus* according to Polak (1908) and to dissections, and in *Papio* to Champneys (1872), Michaëlis (1903), MacDowell (1910), Howell & Straus (1932), Miller (1932), Hill (1970), Jouffroy (1971), Swindler & Wood (1973), Kikuchi (2010a), and to our dissections. [**1**] In hominoids and also in *Rattus* and *Pithecia* the coracobrachialis profundus is usually missing or deeply blended with the coracobrachialis proprius; it is not present as a distinct, separate structure such as that usually found in the taxa of CS-0. The coracobrachialis profundus was effectively not present as a distinct structure in the rats described by Greene (1935) and Walker & Homberger (1997) and in eight of the 10 *Pithecia* limbs dissected by Ziemer (1972) and two of the three *Pithecia* limbs dissected by us. Most statements in the literature agree with our observations in that in *Hylobates* the coracobrachialis profundus is not present as a distinct structure, with exception to Parsons (1898a,b), who stated that *Hylobates* does have a distinct coracobrachialis profundus. The descriptions of *Pongo*, *Gorilla* and *Pan* and our dissections show that in these taxa there is usually no distinct coracobrachialis profundus, although this structure was reported in one side of the body of a gorilla specimen described by Hepburn (1892), in one *Pan* specimen described by Macalister (1871) and in one *Pongo* specimen described by Kallner (1956; a distinct 'coracobrachialis longus' – or 'superficialis' – was reported in one of the four *Pan* specimens dissected by Oishi et al. 2009; and in one of the *Pongo* specimens dissected by Kallner, 1956; but these are most likely erroneous – e.g. in the illustrations of Kallner, 1956 there is nothing resembling the 'coracobrachialis longus' of other tetrapods).

Ventral (volar) forearm muscles

108. *Pronator quadratus is not a distinct muscle (L 1, AUTAPOMORPHY).* [**0**] Pronator quadratus present as a distinct, well-defined muscle. [**1**] Leche (1886) and Jouffroy (1971) stated that, contrary to most mammals, the pronator quadratus is usually 'vestigial' or absent in *Cynocephalus*; in the *Cynocephalus* specimens dissected by us, there is effectively no well-defined, distinct pronator quadratus such as that found in the other mammals we examined.

109. *Flexor pollicis longus is a distinct muscle (L 2, CI 50, RI 0).* [**0**] Flexor pollicis longus usually not present as a distinct, independent muscle. This is the case in all *Rattus*, *Tupaia*, *Cynocephalus*, *Lemur*, *Propithecus*, *Pithecia*, *Pongo*, *Gorilla* and *Pan* specimens described in the literature and dissected by us, except in a few cases (e.g. Raven, 1950 stated that in the gorilla specimen dissected by him the flexor pollicis longus was present as a separate muscle). Regarding *Loris*, *Nycticebus*, *Tarsius*, *Aotus*, *Callithrix*, *Saimiri*, *Macaca*, *Cercopithecus, Colobus* and *Papio*, Day & Napier (1963) stated that the flexor pollicis longus is present as an independent muscle in these genera, and this was followed in the cladistic studies of Groves (1986, 1995) and Shoshani et al. (1996). However, Day & Napier (1963) were clearly referring to the tendon of the flexor digitorum profundus to digit 1 and not to a distinct, separate flexor pollicis longus muscle going exclusively to digit 1. This is because in the *Loris, Nycticebus* and *Tarsius* specimens described by Burmeister (1846), Mivart & Murie (1865), Murie & Mivart (1872), Keith (1894a,b), Allen (1897), Woollard (1925), Miller (1943) and Schultz (1984) and dissected by us, the *Aotus*, *Callithrix* and *Saimiri* specimens reported by Testut (1883), Senft (1907), Beattie (1927) and Hill (1957, 1960, 1962) and examined by us, the *Macaca* specimens described by Haughton (1865), Howell & Straus (1932, 1933), Patterson (1942), Jacobi (1966), Kimura & Tazai (1970), Jouffroy (1971) and Landsmeer (1986) and dissected by us, the *Cercopithecus* specimens reported by Hill (1966) and Lewis (1989) and analyzed by us, the *Colobus* specimens described by Brooks (1886a), Polak (1908) and Jouffroy & Lessertisseur (1960) and studied by us, and the *Papio* specimens reported by Testut (1883), MacDowell (1910), Hill (1970), Swindler & Wood (1973) and Tocheri et al. (2008) and dissected by us there is no separate, distinct flexor pollicis longus going exclusively to this digit (some authors, e.g. Barnard, 1875; Duckworth, 1915; Wood Jones, 1920; and Sonntag, 1924b; state that there is a 'flexor pollicis longus' in some of these taxa, but they are referring to a belly of the flexor digitorum profundus that usually goes to both digits 1 and 2, and not really to a distinct muscular belly going exclusively to digit 1). [**1**] In *Hylobates* and modern humans the flexor pollicis longus is usually present as a distinct, independent muscle. Regarding *Hylobates*, our dissections and the reports of most authors (e.g. Deniker, 1885; Hartmann, 1886; Kohlbrügge, 1890–1892; Hepburn, 1892; Keith, 1894b; Chapman, 1900; McMurrich, 1903a,b; Sonntag, 1924b; Howell, 1936a,b; Straus, 1942a,b; Jouffroy & Lessertisseur, 1960;

Tuttle, 1969; Jouffroy, 1971; Van Horn, 1972; Lorenz, 1974; Susman, 1994, 1998; Stout, 2000; Tocheri et al. 2008) clearly indicate that the members of this taxon usually have an independent flexor pollicis longus going exclusively to digit 1, and only a few authors (e.g. Bischoff, 1870; Payne, 2001) state that in the *Hylobates* specimens dissected by them the flexor pollicis longus blends with, and is thus not really separate from, the flexor digitorum profundus).

110. *Flexor digitorum profundus is not originated from the medial epicondyle of the humerus or from the common flexor tendon (L 2, CI 50, RI 75).* [**0**] As noted by Hepburn (1892) and Tuttle (1969), in most non-primate mammals, including *Rattus*, *Cynocephalus* and *Tupaia*, and in primates such as *Lemur*, *Propithecus*, *Loris, Nycticebus*, *Tarsius*, *Callithrix*, *Aotus, Pithecia, Saimiri*, *Cercopithecus* and *Hylobates*, the flexor digitorum profundus (and/or the flexor pollicis longus in *Hylobates*) usually originates from the medial epicondyle of the humerus and/or from the common flexor tendon associated with this epicondyle, as well as from the radius, ulna and/or interosseous membrane. Regarding *Rattus*, *Cynocephalus* and *Tupaia*, we found a bony origin from the medial epicondyle, ulna and radius, as described by Greene (1935), Leche (1886), Le Gros Clark (1924) and George (1977). Such a bony origin was also reported/found in *Lemur*, *Propithecus*, *Loris, Nycticebus* and *Tarsius* by Burmeister (1846), Mivart & Murie (1865), Murie & Mivart (1872), Woollard (1925), Miller (1943), Jouffroy (1962), Jouffroy (1975), Schultz (1984), Lewis (1989) and by us, in *Pithecia* by Ziemer (1972) and by us, in *Aotus* and *Saimiri* by us, in *Callithrix* by Beattie (1927), and in *Cercopithecus* by us. Concerning *Hylobates*, we found an origin from the medial epicondyle of the humerus, ulna, radius and often the interosseous membrane, as reported in most specimens described by Kohlbrügge (1890–1892), Hepburn (1892), Tuttle (1969), Gibbs (1999) and Michilsens et al. (2009), although Deniker (1885) did not describe an origin from the humerus in the gibbon fetus dissected by him. [**1**] In *Macaca*, *Pongo*, *Gorilla*, *Pan* and modern humans the origin of the flexor digitorum profundus (and of the flexor pollicis longus, in modern humans) is usually exclusively from the radius and/or ulna and, often, from the interosseous membrane. Regarding *Macaca*, Howell & Straus (1933), Patterson (1942) and Kimura & Tazai (1970) stated that the origin is from the ulna, radius, interosseous membrane and sometimes from the deeper fibers of the flexor digitorum superficialis, but not directly from the medial epicondyle of the humerus or the common flexor tendon associated to this epicondyle, and we effectively did not found a bony origin from the humerus in our dissections of this taxon. Concerning *Pongo*, *Gorilla, Homo* and *Pan*, our dissections and most descriptions in the literature agree that there is usually no origin from the humerus nor from the common flexor tendon. Regarding *Papio*, MacDowell (1910) stated that he found a small, partial origin from the common flexor tendon and thus indirectly from the medial epicondyle of the humerus in one specimen of *P. cynocephalus*, but an origin from the humerus was not reported in *P. hamadryas* and *P. anubis* by Champneys (1872), Hill (1970) and Swindler & Wood (1973); as in the *P. anubis* specimen dissected by us there was clearly a partial origin from the humerus, we coded *Papio* as '?'. Regarding *Colobus*, Polak (1908) did not report an origin from the humerus in *C. guereza*, but a partial origin from this bone was found by us in a specimen of this species, and is usually found in other Colobinae such as *Nasalis* and *Procolobus* according to Schultz (1986); therefore, we also code *Colobus* as '?'.

111. *Flexor digitorum profundus is not innervated by the ulnar nerve (L 1, CI 100, RI 100).* [**0**] In numerous non-primate taxa, including *Rattus*, *Cynocephalus* and *Tupaia* (e.g. Leche, 1886; Le Gros Clark, 1924; Greene, 1935; Haines, 1955), as well as in primates such as *Lemur*, *Propithecus*, *Loris, Nycticebus*, *Tarsius*, *Pithecia* and hominoids, the flexor digitorum profundus is usually partially innervated by the ulnar nerve (it should be noted that in table 2 of Jouffroy, 1975 it is erroneously stated that in lemuriforms the flexor digitorum profundus is exclusively innervated by the median nerve: as explained by the same author in his 1962 and 1971 papers, and corroborated by Burmeister, 1846 and Schultz, 1984; in lemuriforms, as well as in other strepsirrhines and in *Tarsius*, the muscle is innervated by both the ulnar and median nerves; innervation by both these nerves was also described in *Pithecia* by Ziemer, 1972). [**1**] In *Macaca*, *Papio* and *Colobus* the muscle is usually not innervated by the ulnar nerve. The muscle is almost never innervated by the ulnar nerve in *Macaca* according to Howell & Straus (1933), Patterson (1942), and Kimura & Tazai (1970); the muscle is also not innervated by this nerve in *Papio* according to Swindler & Wood (1973) and in *Colobus* according to Polak (1908). Until more information is available, *Aotus, Callithrix, Saimiri* and *Cercopithecus* are coded as '?'.

112. *Tendon of flexor digitorum profundus to digit 1 is vestigial or absent (L 3, CI 33, RI 33).* [**0**] In taxa of CS-0 the tendon of the flexor digitorum profundus to digit 1 (or the tendon of the flexor pollicis longus in *Hylobates* and *Homo*), is basically similar to the tendons of the flexor digitorum profundus to the other digits. [**1**] In *Colobus*, *Pongo*, *Gorilla* and *Pan* the tendon to digit 1 is absent or vestigial (i.e. it is markedly shorter and/or thinner than that of taxa of CS-0). This was corroborated in the specimens dissected by us and by others, except in a few specimens of these genera according to Straus (1942a) and in the *Pan paniscus* specimen described by Miller (1952), in which the tendon to digit 1 is said to be similar to the other tendons of the flexor digitorum profundus.

113. *Flexor digitorum superficialis originates from the radius (L 1, CI 100, RI 100).* Contrary to taxa of CS-0 [**0**], in hominoids [**1**] the flexor digitorum superficialis usually partially originates from the radius, as noted by Hepburn (1892) and Loth (1931) and corroborated by our dissections. In the *Rattus*, *Tupaia*, *Cynocephalus*, *Lemur*, *Propithecus*, *Loris, Nycticebus* and *Tarsius* specimens described by Burmeister (1846), Mivart & Murie (1865), Murie & Mivart (1872), Leche (1886), Le Gros Clark (1924), Woollard (1925), Greene (1935), Miller (1943), Haines (1955), Jouffroy (1962), Jouffroy (1975), George (1977), Schultz (1984) and Lewis (1989), and dissected by us, the origin of the muscle is only from the medial epicondyle of the humerus, the common flexor tendon attached to this epicondyle and/or the capsule of the elbow joint. This is also the case in *Callithrix* and *Pithecia* according to Senft (1907), Beattie (1927), Ziemer (1972) and to our dissections, in *Aotus* and *Saimiri* to our observations, in *Macaca* to Howell & Straus (1933), Patterson (1942), Jacobi (1966) and Kimura & Tazai (1970) and to our dissections, in *Colobus* to Polak (1908) and to our observations, and in *Cercopithecus* to our dissections. Regarding *Papio*, Michaëlis (1903) and Hill (1970) stated that they found an origin from the humerus but also a small, partial origin from the ulna in one specimen of *P. papio* and one specimen of *P. hamadryas*, but the usual condition for this genus clearly seems to be that in which there is no radial nor ulnar origin, as described by Macalister (1871) in *P. hamadryas*, by Champneys (1872) in *P. anubis*, by MacDowell

(1910) in *P. cynocephalus*, and found by Swindler & Wood (1973) and by us in *P. anubis*. Concerning *Hylobates*, Kohlbrügge (1890–1892), Hepburn (1892), Jouffroy (1971), Gibbs (1999) and Michilsens et al. (2009) referred to an origin including the ulna, radius and the medial epicondyle of the humerus and/or the common flexor tendon, as we found in specimen HU HL1, and only a few researchers stated that there is no ulnar origin (e.g. Loth, 1931) or no radial origin (e.g. Deniker, 1885), although there was seemingly neither radial nor ulna origin in our specimen VU HG1. Regarding *Pongo*, Hepburn (1892), Kohlbrügge (1897), Primrose (1899, 1900), Sonntag (1924a), Loth (1931), Jouffroy (1971), Gibbs (1999) and Payne (2001) refer to an origin including the ulna, radius and the medial epicondyle of the humerus and/or the common flexor tendon, as we found in our dissections, and only a few authors (e.g. Beddard, 1893; Kallner, 1956) stated that there is no ulnar origin, while only Michaëlis (1903) did not refer to an origin from the radius. Concerning *Gorilla*, Hepburn (1892), Loth (1931), Raven (1950), Preuschoft (1965), Jouffroy (1971) and Gibbs (1999) referred to an origin including the ulna, radius and medial epicondyle of the humerus and/or the common flexor tendon, although there was no ulnar origin in Deniker's (1885) fetal gorilla, in Macalister's (1873) gorilla specimen, and in our VU GG1 gorilla specimen. Concerning *Pan*, Sutton (1883), Hepburn (1892), Dwight (1895), MacDowell (1910), Sonntag (1923), Loth (1931), Miller (1952), Jouffroy (1971), Swindler and Wood (1973) and Gibbs (1999) refer to an origin including the ulna, radius and the medial epicondyle of the humerus and/or the common flexor tendon, as we found in our dissections, and only a few authors (e.g. Beddard, 1893) stated that there is no ulnar origin. Regarding modern humans, there is a partial origin from the radius, as noted by Loth (1931) and Gibbs (1999) and shown, for instance, in plate 450 of Netter (2006).

114. *Flexor digitorum superficialis originates from the ulna (L 1, CI 100, RI 100).* Contrary to taxa of CS-0 [**0**], in hominoids [**1**] the flexor digitorum superficialis usually partially originates from the ulna, as noted by Kohlbrügge (1890–1892), Hepburn (1892) and corroborated by our dissections (see character above).

115. *Flexor digitorum superficialis inserts onto digit 5 (L 1, CI 100, RI 100).* [**0**] As stated by Jouffroy (1971), in numerous non-primate eutherian mammals, including taxa such as *Rattus* and *Tupaia*, the flexor digitorum superficialis usually inserts onto digits 2–4. In the rats described in most textbooks and by Peterka (1936), and dissected by us, the muscle goes to digits 2–4, but in a few rats the muscle goes to digits 2–5, as noted by Greene (1935) and Jouffroy (1971). Concerning *Tupaia*, Le Gros Clark (1924), Straus (1942a), Jouffroy (1971) and George (1977) describe an insertion onto digits 2–4, and that is also what we found in our dissections, but in *Ptilocercus* Le Gros Clark describes an insertion onto digits 2–5. [**1**]. In *Cynocephalus* and the primates included in this analysis this muscle is usually also inserted onto digit 5. Regarding *Cynocephalus*, Leche (1886) and Jouffroy (1971) describe an insertion onto digits 2–5, and that is also what we found in our dissections. In the *Lemur*, *Propithecus*, *Loris*, *Nycticebus*, *Tarsius*, *Callithrix*, *Pithecia*, *Aotus*, *Saimiri*, *Macaca*, *Papio*, *Colobus*, *Cercopithecus*, *Hylobates*, *Pongo*, *Gorilla, Homo* and *Pan* specimens described in the literature and dissected by us, the insertion is to digits 2–5, except in some lorisiforms (in which there is an insertion onto digits 3, 4 and 5 but not to digit 2: see character below) and in very few cases within other primate genera (e.g. the left side of the *Pongo* specimen described by Jouffroy & Lessertisseur, 1958, 1959).

116. *Flexor digitorum superficialis does not insert onto digit 2 (L 1, AUTAPOMORPHY).* [**0**] Flexor digitorum superficialis inserting onto digit 2 (see character above). [**1**]. As noted by Jouffroy (1971), in lorisiforms such as *Loris* and *Perodicticus* this muscle usually does not insert onto digit 2. Within all the *Loris* specimens reported by Murie & Mivart (1872), Nayak (1933), Straus (1942b) and Miller (1943) the insertion was only onto digits 3–5, except in one of the two specimens reported by Murie & Mivart (1875), in which the muscle sent tendons to digits 2–5 (we could not discern the insertion of the muscle in the *Loris* specimen dissected by us). Barnard (1875) reported a specimen of '*Nycticebus* sp.' with an insertion onto digits 3–5. However, it is not clear if this specimen really belongs to the genus *Nycticebus* as currently defined, because some species that were assigned to this genus (e.g. '*Nycticebus tardigradus*') in the past are now included in the genus *Loris*. Straus (1942b), seemingly based on reports of authors such as Barnard (1875), also stated that in '*Nycticebus* sp.' there is no insertion onto digit 2. However, this feature has been analyzed in detail in six specimens that surely belong to the genus *Nycticebus* (the two *N. bengalensis* and the single *N. coucang* specimens dissected by Miller (1943), as well as the two *N. pygmaeus* specimens and the *N. coucang* specimen dissected by us), and in all these specimens there was an insertion onto digits 2–5. Therefore, contrary to *Loris*, *Nycticebus* is coded as CS-0.

117. *Palmaris longus is hypertrophied (L 1, AUTAPOMORPHY).* [**0**] Palmaris longus not hypertrophied. [**1**]. As noted by Leche (1886) and Diogo et al. (2009a), in *Cynocephalus* the palmaris longus is hypertrophied, having a much larger belly than in taxa of CS-0.

118. *Palmaris longus is absent in > 5% of the cases (L 1, CI 100, RI 100).* As noted by Keith (1899), Loth (1931), Sarmiento (1994), Gibbs (1999) and Gibbs et al. (2002), the palmaris longus is always, or almost always, present in the specimens of taxa of CS-0 [**0**], but it is absent in more than 5% of the cases in specimens of *Gorilla*, *Pan* and *Homo* [**1**]. In the *Rattus*, *Tupaia*, *Cynocephalus*, *Lemur*, *Propithecus*, *Loris, Nycticebus* and *Tarsius* specimens reported by Burmeister (1846), Mivart & Murie (1865), Murie & Mivart (1872), Leche (1886), Allen (1897), Le Gros Clark (1924), Woollard (1925), Greene (1935), Miller (1943), Haines (1955), Jouffroy (1962), Jouffroy (1975), George (1977) and Schultz (1984) and dissected by us the palmaris longus was always present, except in one of the two *Tarsius* specimens dissected by Schultz (1984). In the *Callithrix*, *Saimiri*, *Aotus* and *Pithecia* specimens reported by Senft (1907), Beattie (1927), Ziemer (1972) and Kikuchi (2010a) and dissected by us, *Macaca* specimens described by Haughton (1865), Howell & Straus (1933), Patterson (1942), Jacobi (1966), Kimura & Tazai (1970), Ogihara et al. (2009), Kikuchi (2010a) and examined by us, *Cercopithecus* specimens dissected by Hill (1966) and by us, and *Papio* specimens examined by Macalister (1871), Champneys (1872), Michaëlis (1903), MacDowell (1910), Hill (1970), Swindler & Wood (1973), Kikuchi (2010a) and by us, the muscle was present. Polak (1908) did not describe the palmaris longus in *Colobus guereza*, but it is possible that the palmaris longus *sensu* the present work actually corresponds to part of the structure that she designated as 'flexor digitorum sublimis'; in fact, the palmaris longus was in present in the *C. guereza* specimen dissected by us, and is also usually present in other Colobinae such as *Procolobus* and *Nasalis*, as reported by Schultz (1986). In the *Hylobates* specimens described by Kohlbrügge (1890–1892; three specimens), Hepburn (1892; one specimen), Grönroos (1903;

various specimens), Payne (2001; one specimen), Michilsens et al. (2009; 11 specimens) and Kikuchi (2010a; two specimens), and dissected by us (two specimens), the muscle was always present, and according to Loth (1931), Gibbs (1999) and Gibbs et al. (2002) it is present in all hylobatids, although Deniker (1885) suggested that it was missing in the gibbon fetus dissected by him. In the *Pongo* specimens described by Church (1861–1862; one specimen), Chapman (1880; one specimen), Hepburn (1892; one specimen), Beddard (1893; one specimen), Fick (1895a,b; one specimen), Primrose (1899, 1900; one specimen), Michaëlis (1903; one specimen), Sonntag (1924a; one specimen), Kallner (1956; two specimens), Payne (2001; three specimens), Oishi et al. (2008, 2009; three specimens) and dissected by us (two specimens) the muscle was present, and according to Loth (1931), Gibbs (1999) and Gibbs et al. (2002) it is present in all of the specimens of this genus, although Traill (1821) suggested that it was missing on one side of a orangutan dissected by him. In the *Gorilla* specimens described by Owen (1868; one specimen), Macalister (1873; one specimen), Hepburn (1892; one specimen), Raven (1950; one specimen) and Sarmiento (1994; two specimens) the muscle was present, but it was absent, for instance, in the specimens reported by Chapman (1878; one specimen), Bischoff (1880; one specimen), Deniker (1885; two specimens), Hartmann (1886; one specimen), Symington (1889; one specimen), Eisler (1890; one specimen), Hepburn (1892; one specimen), Hofër (1892; one specimen), Duckworth (1904; one specimen), Sommer (1907; one specimen) and Pira (1913; one specimen) and in five of the six upper limbs (three specimens) dissected by Preuschoft (1965), as well as in both sides of the single gorilla specimen in which we could discern this feature (VU GG1); it is only present in seven out of 11 cases according to Keith's (1899) review, in 15% of the cases according to Loth's (1931) review, in four out of 11 cases according to Sarmiento's (1994) review, and in six out of 19 cases according to Gibbs' (1999) review (so it is clearly absent in more than 5% of gorilla limbs). In the *Pan* specimens described by Tyson (1699; one specimen), Vrolik (1841; one specimen), Wilder (1862; one specimen), Gratiolet & Alix (1866; one specimen), Humphry (1867; two specimens), Macalister (1871; one specimen), Champneys (1872; one specimen), Chapman (1879; one specimen), Hepburn (1892; one specimen), Beddard (1893; one specimen), Dwight (1895; one specimen), MacDowell (1910; one specimen), Ribbing & Hermansson (1912; one specimen), Miller (1952; one specimen), Ziegler (1964; one specimen), Swindler & Wood (1973; one specimen), Sarmiento (1994; one specimens), Ogihara et al. (2005; one specimen), Oishi et al. (2009; four specimens) and Kikuchi (2010a; one specimen) the muscle was present, but it was absent for instance in the specimen dissected by Sonntag (1923), in one of the three specimens reported by Sonntag (1924a), in one of the four upper limbs dissected by Carlson (2006), and in one out of the six specimens dissected by us in which we could discern this feature in detail; it is only present in nine out of 12 cases according to Keith's (1899) review, in 95% of the cases according to Loth's (1931) review, in 15.5 out of 17 cases according to Sarmiento's (1994) review, and in 19 out of 28 cases according to Gibbs' (1999) review (so, in overall, it clearly seems to be absent in much more than 5% of chimpanzee limbs). Concerning modern humans, Loth (1931) stated that the muscle is present in about 97.5–98% of the cases, but in a more recent survey Gibbs (1999) stated that its incidence is said to range, within the recent literature, from 96.1 to 79.6%, with most authors referring to about 85% of the cases (so, in overall, it does seems to be missing in more than 5% of modern human upper limbs).

119. *Flexor carpi ulnaris does not originate from the humerus (L 1, CI 100, RI 100).* [**0**] In numerous non-primate mammals (e.g. Jouffroy, 1971), including *Rattus* and *Tupaia*, as well as in the vast majority of primates, the flexor carpi ulnaris usually originates from the humerus (often from the medial epicondyle) and ulna (often from the coronoid process). In *Rattus* and *Tupaia* specimens described by Greene (1935), Le Gros Clark (1924), George (1977) and Jouffroy (1971) and dissected by us, the flexor carpi ulnaris originates from the humerus and the ulna. This is also the case in *Lemur*, *Propithecus*, *Nycticebus*, *Loris* and *Tarsius* (literature and our dissections), in *Callithrix* and *Pithecia* (Beattie, 1927; Ziemer, 1972; our dissections), in *Aotus* and *Saimiri* (our observations), in *Macaca* (Howell & Straus, 1933; Patterson, 1942; Kimura & Tazai, 1970; our dissections), in *Cercopithecus* (Hill, 1966; Lewis, 1989; our dissections), in *Colobus* (Polak, 1908; our observations), and *Papio* (Champneys, 1872; Swindler & Wood, 1973; our dissections). A bony origin from the ulna and humerus is usually present in modern humans and was found in the *Pongo* specimens dissected by us and described by Hepburn (1892), Beddard (1893), Primrose (1899, 1900), Sonntag (1924a), Sullivan & Osgood (1927) and Kallner (1956), in the *Gorilla* specimens described by Macalister (1873), Hepburn (1892), Raven (1950) and Preuschoft (1965), and in the *Pan* specimens dissected by us and described by Gratiolet & Alix (1866), Hepburn (1892), Beddard (1893), Sonntag (1923), Miller (1952) and Swindler & Wood (1973). [**1**] As noted by Leche (1886) and Jouffroy (1971) and corroborated by our dissections, in *Cynocephalus* the flexor carpi ulnaris usually does not originate from the humerus. Jouffroy (1971) stated that in hylobatids there is no direct bony origin from the ulna, and according to Kohlbrügge (1890–1892) this was effectively the case in the three *Hylobates* specimens dissected by him, as it was in the 11 *Hylobates* specimens examined by Michilsens et al. (2009). However, in the *Hylobates* specimen reported by Hepburn (1892) and the two *Hylobates* specimens in which we could analyze this feature in detail (VU HG1 and HU HL1) the origin was from the ulna and the humerus, and in her recent review, Gibbs (1999) stated that an origin from both the humerus and the ulna is the usual condition for this genus. Therefore, until more information is available *Hylobates* is coded as '?'.

120. *Epitrochleoanconeus is not a distinct muscle (L 3, CI 33, RI 60).* [**0**] In most eutherian non-primate mammals (e.g. Jouffroy, 1971), including *Cynocephalus* and *Tupaia*, as well as primates such as *Lemur*, *Propithecus*, *Tarsius*, *Pithecia*, *Callithrix*, *Aotus*, *Saimiri*, *Macaca*, *Cercopithecus*, *Colobus*, *Papio* and *Pan*, the epitrochleanconeus is usually present as a distinct muscle. This was corroborated in *Cynocephalus* and *Tupaia* (Leche, 1886; Le Gros Clark, 1924; Haines, 1955; George, 1977; our dissections), in *Lemur* and *Propithecus* (Jouffroy, 1962; Jouffroy, 1975; Lewis, 1989; our dissections), in *Pithecia* (Ziemer, 1972; our dissections), in *Callithrix*, *Aotus* and *Saimiri* (our dissections), in *Cercopithecus* (Lewis, 1989; our observations), in *Colobus* (Polak, 1908; our dissections) and *Papio* (Swindler & Wood, 1973; our dissections). Howell & Straus (1932, 1933) stated that the muscle is usually, but not always, present in *Macaca*, and Patterson (1942), Jacobi (1966) and Kimura & Tazai (1970) did found this muscle in all the numerous *Macaca* specimens dissected by them, as we did in our dissections. Concerning *Pan*, there are some cases in which the muscle is not described but it is not clear if this is because it is actually absent or not; there are other, few cases

(e.g. Macalister, 1871 – one specimen; Sonntag, 1923 – one specimen) in which the authors stated that the muscle was absent, and there are numerous cases in which the authors stated that the muscle was present (e.g. in the specimen described by Gratiolet & Alix, 1866; in one side of the body of the specimen described by Howell & Straus, 1932 – absent on the other side – in one side of the body of the specimen dissected by Miller, 1952 – absent on the other side – in one side of the body of the specimen described by Ziegler, 1964 – he could not discern if the muscle was present or not on the other side – in the specimen illustrated by Swindler & Wood, 1973 – in their p. 327 they state that this muscle is absent in *Pan*, but in p. 146 they state that it is actually present and they clearly show it in the specimen illustrated in a figure in their p. 147 – and in two of the five specimens dissected by us in which we could discern if the muscle was present or not – in the other three, infant, specimens the muscle clearly seemed to be undifferentiated). Regarding *Tarsius*, Woollard (1925) did not refer to the epitrochleoanconeus, but in fig. 48 he showed a short muscle going from the medial epicondyle of the humerus (just lateral to the origin of the flexor carpi ulnaris) to the olecranon process of the ulna, which clearly seems to correspond to the epitrochleoanconeus *sensu* the present work. This is corroborated by the detailed works of Burmeister (1846), Howell & Straus (1932) and Schultz (1984), which effectively stated that this muscle was present in all the *Tarsius* specimens dissected by them (as it was in our dissections of *Tarsius*). [**1**] In *Loris, Nycticebus, Hylobates*, *Pongo*, *Gorilla* and modern humans the epitrochleoanconeus is usually not present as a separate, well-defined muscle. The muscle is missing in *Loris* according to Murie & Mivart (1872), Hill (1953) and Jouffroy (1962). It was reported to be present in orangutans by Testut (1884), Kohlbrügge (1897) and Kallner (1956), but was not found in *Pongo* by us and by most authors, including Church (1861–1862), Hepburn (1892), Beddard (1893), Fick (1895a,b), Primrose (1899, 1900), Michaëlis (1903), Sonntag (1924a), Sullivan & Osgood (1927) and Oishi et al. (2008). Kohlbrügge (1890–1892), Deniker (1885), Howell & Straus (1932) and Michilsens et al. (2009) did also not found/report this muscle in *Hylobates*, and we did not found this muscle in our dissection of this taxon. The muscle was also not found/described in the gorillas reported by Duvernoy (1855–1856), Macalister (1873), Chapman (1878), Bischoff (1880), Deniker (1885), Hartmann (1886), Eisler (1890), Hepburn (1892), Hofër (1892), Sommer (1907), Pira (1913), Raven (1950) and Preuschoft (1965) and dissected by us. Regarding *Nycticebus*, Howell & Straus (1932) reported a specimen of '*Nycticebus* sp.' without an epitrochleoanconeus. However, it is not clear if this specimen really belongs to the genus *Nycticebus* as currently defined, because some species that were assigned to this genus (e.g. '*Nycticebus tardigradus*') in the past are now included in the genus *Loris*. Miller's (1943) descriptions of *Nycticebus* refer only to an 'anconeus sextus', which probably corresponds to the posterior head of the triceps brachii *sensu* the present work (see above), so the epitrochleoanconeus was apparently missing in the specimens dissected by her, as it was in the *N. coucang* specimen dissected by us. Therefore, as is the case in *Loris*, the muscle is usually missing in *Nycticebus*; this latter taxon is thus coded as CS-1. The *Rattus* specimen dissected by us seemed to have a small epitrochleoanconeus, but we are not completely sure about this; as Greene (1935) does not describe this muscle, we prefer to code this taxon as '?', until more data is available.

121. *Flexor carpi radialis inserts onto the metacarpals II and III (L 2, CI 50, RI 83).* [**0**] In most non-primate eutherian mammals (e.g. Jouffroy, 1971), including *Rattus* and *Cynocephalus*, as well as primates such as *Loris*, *Nycticebus*, *Lemur* and *Propithecus*, the flexor carpi radialis usually inserts onto metacarpal III (as is usually the case in, e.g. *Rattus*) or metacarpal II (as is usually the case in, e.g. *Lemur* and *Propithecus*) or, in a few cases, onto other structures (as is usually the case in, e.g. *Cynocephalus*), but usually does not attach onto both the metacarpal II and III. As noted by Greene (1935) and Jouffroy (1971), in *Rattus* the muscle goes to metacarpal III only, and as described by Leche (1886) and Jouffroy (1971) and corroborated by our dissections, in *Cynocephalus* the muscle goes to the trapezoid and/or trapezium. In *Lemur*, *Propithecus*, and some species of *Nycticebus* (e.g. *N. bengalensis*) the muscle usually goes to metacarpal II, as reported by Murie & Mivart (1872), Miller (1943) and Jouffroy (1962, 1971), Jouffroy (1975), and found in our dissections, while in *Loris* and some other species of *Nycticebus* (e.g. *N. coucang*) it goes exclusively to the trapezoid according to Miller (1943). Because in one of the *Nycticebus pygmaeus* specimens, and also in the single *N. coucang* specimen, dissected by us there was an attachment onto metacarpal II, while in the other *N. pygmaeus* specimen there was an attachment to metacarpals II and III, one can say that in *Nycticebus* there is usually no attachment to both metacarpals II and III: within the six specimens of this genus dissected by Miller (1943) and by us, this actually only happened in a single specimen. Regarding *Loris*, in the single specimen dissected by us the muscle did seem to attach onto metacarpal II, but we cannot be completely sure that it did not attach also/instead onto the trapezoid. [**1**] In *Tupaia*, *Tarsius*, *Pithecia*, *Aotus*, *Callithrix*, *Saimiri*, *Macaca*, *Papio*, *Cercopithecus*, *Colobus*, *Pongo*, *Gorilla*, *Pan* and modern humans the muscle often inserts onto both metacarpals II and III. Regarding *Tupaia*, Le Gros Clark (1924) described a specimen in which the muscle goes only to metacarpal II, as Le Gros Clark (1926) did for *Ptilocercus*, but Straus (1942a) stated that in *Tupaia* the muscle might go to metacarpal II, to metacarpal III, or to both, and in the *Tupaia* specimens reported by Haines (1955) and George (1977) the muscle is effectively inserted onto both metacarpals II and III. Regarding *Papio*, Champneys (1872), Michaëlis (1903) and Hill (1970) state that the muscle is similar to that of modern humans (which usually have an insertion onto metacarpals II and III), and Swindler & Wood (1973) effectively described an insertion onto both metacarpals II and III in *Papio*, as found in our dissections, which also revealed that in *Cercopithecus* the muscle also goes to metacarpals II and III. Regarding *Gorilla*, an insertion onto metacarpals II and III was described by Hepburn (1892), Raven (1950) and Preuschoft (1965; this latter author also referred to an insertion onto the trapezius), and according to Jouffroy (1971) and Gibbs (1999) such an insertion onto these two metacarpals is usually, and possibly even always, found in gorillas; we did effectively find this configuration in our dissections of *Gorilla*. Regarding *Pan*, in the survey of Gibbs (1999) this author stated that the muscle is inserted onto both metacarpals II and III in five out of 10 specimens, but Jouffroy (1971) argue that an insertion onto both metacarpals is clearly the usual condition for *Pan*: an exclusive insertion onto metacarpal II was described by Gratiolet & Alix (1866), Beddard (1893), Dwight (1895) and Miller (1952), but in the specimens dissected by Hepburn (1892), Sonntag (1923), Ziegler (1964) and Swindler & Wood (1973), as well as in the three specimens dissected by us in which we could discern this feature in detail, the insertion

was onto both metacarpals II and III. Regarding modern humans, as noted by Jouffroy (1971) and Gibbs (1999) and shown in, e.g. plate 492 of Netter (2006), the muscle usually goes to both metacarpals II and III. Interestingly, our studies indicated that, within at least some primate groups, the descriptions of this muscle have been too simplified. That is, some authors, seemingly based on the usual modern human configuration and/or on their own expectations, reported that the muscle attaches to metacarpal II in taxa that, according to our detailed dissections, actually usually display an insertion onto both metacarpals II and III. This is the case in the *Macaca, Tarsius*, *Callithrix*, *Aotus*, *Pithecia, Colobus,* and *Saimiri* specimens dissected by us, in which the attachment was clearly to metacarpals II and III; therefore, these genera are coded here as CS-1. For instance, according to Howell & Straus (1933) in *Macaca mulatta* the muscle often goes to metacarpals II and III, but Kimura & Tazai (1970) did not report an insertion onto metacarpal III in the 10 *M. fascicularis* specimens dissected by them. However, as in the *M. nigra* specimen dissected by Patterson (1942) and the *M. fascicularis* specimen dissected by us (VU MF1) the muscle clearly attached onto metacarpals II and III, we code *Macaca* as CS-1. Regarding *Pongo*, an exclusive insertion onto metacarpal II was described by Beddard (1893; one specimen), Kohlbrügge (1897; one specimen), Primrose (1899, 1900; one specimen) and Sullivan & Osgood (1927; one specimen). Again, one cannot be sure if these descriptions might have been influenced by the expectations of the authors (see above), because in the *Pongo* specimens described by Hepburn (1892; one specimen), and Sonntag (1924a; one specimen), as well as in the two specimens dissected by us, the muscle actually goes to both metacarpals II and III (Kallner, 1956 stated that in the two specimens dissected by her the insertion was onto metacarpal I instead). In the survey of the literature by Gibbs (1999), she stated that an insertion onto metacarpals II and III was found in three out of seven orangutans, but the fact that we found this condition in the two orangutans dissected by us, and also that even if we would take into account Gibbs' numbers we would now have, with our two specimens, a total of five out of nine orangutans with a double insertion, seem to suggest that a double insertion is effectively often found in *Pongo*: this genus is thus coded as CS-1. Regarding *Hylobates*, according to Hepburn (1892) and Jouffroy (1971) the muscle goes to both metacarpals II and III, and this was precisely the condition found in our specimen HU HL1. However, Michilsens et al. (2009) stated that, in the 11 *Hylobates* specimens dissected by them (three *H. lar*, two *H. pileatus*, two *H. moloch* and four *H. syndactylus*), the muscle always attaches to metacarpal II only, and such an insertion was also found in the three *Hylobates* specimens dissected by Kohlbrügge (1890–1892; one *H. agilis*, one *H. moloch* and one *H. syndactylus*) and in our specimen VU HG1. Therefore, in this case it is very difficult to discern what might be the usual condition for hylobatids, and we thus code *Hylobates* as '?'.

122. *Flexor carpi radialis does not insert onto the metacarpal II or the metacarpal III (L 1, AUTAPOMORPHY).* [**0**] As explained in the character above, in the vast majority of non-primate and primate mammals the flexor carpi radialis usually inserts onto metacarpal II, onto metacarpal III, or onto both these metacarpals. [**1**] However, as described by Leche (1886) and Jouffroy (1971) and corroborated by our dissections, in *Cynocephalus* this muscle does not attach to either of these bones, being instead usually exclusively attached onto the trapezium and/or the trapezoid. A similar condition was found in the two *Loris tardigradus* specimens dissected by Miller (1943), in which the muscle was exclusively inserted onto the trapezoid. In the single specimen of this species that we dissected the muscle did seem to attach onto metacarpal II, although we cannot be completely sure that it did not attach also/instead onto the trapezoid. Therefore, until more information is available for *Loris*, this taxon is coded as '?' (*Nycticebus* is coded as CS-0: see character above).

123. *Flexor carpi radialis originates from the radius (L 2, CI 50, RI 50).* [**0**] In most non-primate eutherian mammals (e.g. Jouffroy, 1971), including *Rattus*, *Tupaia* and *Cynocephalus*, as well as all the non-hominoid primates included in this analysis and in modern humans, the flexor carpi radialis usually has a bony origin from the humerus, but not from the radius. In the *Rattus*, *Cynocephalus* and *Tupaia* specimens described by Greene (1935), Le Gros Clark (1924), George (1977) and Leche (1886) and dissected by us, the bony origin of the muscle is from the humerus. This is also the case in *Lemur*, *Propithecus*, *Loris, Nycticebus* and *Tarsius* according to Murie & Mivart (1872), Woollard (1925), Miller (1943), Jouffroy (1962), Jouffroy (1975), Schultz (1984) and our dissections, in *Callithrix, Aotus*, *Saimiri*, *Pithecia* to Senft (1907), Beattie (1927), Ziemer (1972) and our dissections, *Macaca* to Howell & Straus (1933), Patterson (1942) and Kimura & Tazai (1970) and our dissections, *Colobus* to Polak (1908) and our observations, and *Cercopithecus* to Hill (1966) and our dissections. Regarding *Papio*, Champneys (1872), Michaëlis (1903) and Hill (1970) state that the muscle is similar to that of modern humans, and Swindler & Wood (1973) effectively described an origin exclusively from the humerus in *Papio*, as also found in our dissections. Concerning modern humans, the bony origin is usualy only from the humerus, as reported by, e.g. Loth (1931), Ziegler (1964), Jouffroy (1971) and Netter (2006). [**1**] In *Pongo*, *Gorilla* and *Pan* the muscle has bony origins from at least the humerus and the radius. This condition was found in the *Pongo* specimens reported by Hepburn (1892), Beddard (1893), Fick (1895a,b), Kohlbrügge (1897), Primrose (1899, 1900), Sonntag (1924a), Sullivan & Osgood (1927), Kallner (1956) and dissected by us, in the *Gorilla* specimens described by Duvernoy (1855–1856), Symington (1889), Hepburn (1892), Raven (1950) and Preuschoft (1965) and dissected by us, and in the *Pan* specimens described by Gratiolet & Alix (1866), Hartmann (1886), Dwight (1895), Sonntag (1923), Miller (1952), Ziegler (1964) and Swindler & Wood (1973) and dissected by us (there are only very few descriptions of chimpanzees that refer to a bony origin from the humerus only, e.g. Hepburn, 1892; and Beddard, 1893). Regarding *Hylobates*, according to Hepburn (1892; one specimen) and Kohlbrügge (1890–1892; three specimens), the muscle originates from both the humerus and the radius, and this was precisely the condition found in our dissections of this taxon. However, Michilsens et al. (2009) stated that in the 11 *Hylobates* specimens dissected by them (three *H. lar*, two *H. pileatus*, two *H. moloch* and four *H. syndactylus*), the muscle originated from the humerus only, except in the three specimens of *H. lar*, in which the muscle also originated from the pronator teres and, thus, indirectly from the radius. Therefore, until we have more data for hylobatids, we code this feature as '?' for *Hylobates*.

124. *Pronator teres originates from the ulna (ordered multistate character) (L 2, CI 100, RI 100).* [**0**] In most non-primate eutherian mammals (e.g. Howell & Straus, 1933; Jouffroy, 1971), including *Rattus*, *Tupaia* and *Cynocephalus*, as well as the non-hominoid primates included in this analysis, the pronator teres usually has a bony origin from the humerus, and not from the

ulna. In the *Rattus*, *Cynocephalus* and *Tupaia* specimens described by Leche (1886), Greene (1935), Le Gros Clark (1924), Jouffroy (1962), George (1977) and dissected by us, the bony origin of the muscle was from the humerus, although Straus (1942a) stated that *Tupaia* has humeral and ulnar heads separated by the median nerve, as is usually the case in modern humans. Miller (1932) stated that in *Tarsius* the origin of the muscle is from the ulna and humerus, but in all the specimens of *Lemur*, *Propithecus*, *Loris, Nycticebus* and *Tarsius* reported by Burmeister (1846), Mivart & Murie (1865), Murie & Mivart (1872), Parsons (1898b), Woollard (1925), Miller (1943), Jouffroy (1962), Jouffroy (1975) and Schultz (1984) and dissected by us the bony origin was clearly from the humerus only. In the *Callithrix, Aotus, Saimiri* and *Pithecia* specimens reported by Senft (1907), Beattie (1927) and Ziemer (1972) and dissected by us, *Macaca* specimens dissected by Howell & Straus (1933), Patterson (1942) and Kimura & Tazai (1970) and by us, *Cercopithecus* specimens dissected by Miller (1932), Hill (1966) and by us, *Colobus* specimens examined by Polak (1908) and by us, and *Papio* specimens studied by Champneys (1872), Miller (1932), Hill (1970), Swindler & Wood (1973) and by us, the bony origin is also exclusively from the humerus. Within hominoids a bony origin from the ulna (in addition to an origin from the humerus) is 'frequent' (i.e. often but not usually, that is, present in < 50% of the cases) in *Hylobates* [**1**] and seemingly the rule (i.e. usually, that is, present in ≥ 50% of the cases) in *Pan*, *Gorilla, Pongo* and modern humans [**2**]. Regarding *Hylobates*, the specimens reported by Hepburn (1892), Chapman (1900), Lewis (1989) and Michilsens et al. (2009) and our specimen VU HG1 had only a humeral origin, and Deniker (1885) suggested that this was also the case in the gibbon fetus dissected by him, but the three specimens dissected by Kohlbrügge (1890–1892), the specimen described by Stern & Larson (2001) and our specimen HU HL1 did have a few fibers that also originated from the ulna (although there was not a distinct, well defined ulnar head as that found for instance in modern humans); according to Loth (1931) and Jouffroy (1971) a distinct ulnar head is only found in 41 and 42% of hylobatids, respectively. Regarding *Gorilla*, Owen (1868) stated that the two heads are present but not as well defined as in modern humans, and in the specimens of Duvernoy (1855–1856), the specimen of Chapman (1878), the specimen of Bischoff (1880), two of the three specimens of Hartmann (1886), one of the two specimens of Deniker (1885), the specimen of Eisler (1890), the specimen of Hepburn (1892), the specimen of Hofër (1892) and the specimen of Lewis (1989), as well as our VU GG1 specimen, there was no distinct ulnar head, but in the specimen of Macalister (1873), one of the three specimens of Hartmann (1886), one of the two specimens of Deniker (1885), the specimen of Symington (1889), the specimen of Sommer (1907), the specimen of Pira (1913), the specimen of Miller (1932), and the specimen of Raven (1950) the two heads were present. According to Parsons (1898b), Chylewski (1926), Loth (1931), Preuschoft (1965) and Jouffroy (1971) the two heads are present in 40, 44, 44, 47 and 42% of gorillas, respectively, but if one takes into account the review of the literature done by Preuschoft (1965) plus the presence of the two heads in the specimen of Owen (1868) and in the three specimens of Preuschoft (1965) and its absence in the specimen of Lewis (1989) and our VU GG1 specimen, one concludes that the two heads are actually present in 12 out of 23 gorillas, i.e. in 52% of the cases. Regarding *Pongo*, the specimens reported by Chapman (1880), Hepburn (1892), Beddard (1893), Fick (1895a,b), Primrose (1899, 1900), Sonntag (1924a,b), Kallner (1956), Oishi et al. (2008, 2009) and dissected by us have an ulnar head and a humeral head separated by the median nerve, although Lewis (1989) said that a distinct ulnar head is not present in apes. According to Parsons (1898b), Loth (1931) and Jouffroy (1971) the two heads are present in 100, 73 and 70% of orangutans, respectively, although Gibbs (1999) confusingly (and seemingly erroneously) stated that the two heads are found only in 3/7 orangutans. Regarding *Pan*, the specimens reported by Tyson (1699), Macalister (1871), Champneys (1872), Chapman (1879), Hepburn (1892), Beddard (1893), Dwight (1895), Sonntag (1923, 1924b), Miller (1952), Swindler & Wood (1973), Stern & Larson (2001) and dissected by us have an ulnar head and a humeral head separated by the median nerve, and Oishi et al. (2009) found the two heads in two of the four *Pan* specimens dissected by them but could not find an ulnar head in the two other specimens that they dissected. However Gratiolet & Alix (1866) described a humeral head only in *Pan*, and Lewis (1989) said that a distinct ulnar head is not present in apes. According to Parsons (1898b), Loth (1931) and Jouffroy (1971) the two heads are present in 90, 91 and 90% of chimpanzees, respectively, although Gibbs (1999) stated that the two heads are found only in 5/9 *Pan*. Concerning modern humans, the two heads are almost always present and separated by the median nerve (e.g. according to Loth (1931) this occurs in 99% of cases).

Hand muscles

125. *Palmaris brevis is not a distinct muscle (L 3, CI 33, RI 60).* [**0**] In most eutherian non-primate mammals (e.g. Jouffroy, 1971), including *Cynocephalus, Rattus* and *Tupaia*, as well as all the primates included in this analysis except *Hylobates* and *Pongo*, the palmaris brevis is usually (≥ 50%) present as a distinct muscle. Regarding *Rattus*, it is difficult to discern if this small muscle is present in the specimens dissected by us, but Peterka (1936) stated that rats do have this muscle and Jouffroy (1971) corroborated that rodents usually have this muscle. Regarding *Cynocephalus*, Leche (1886) did not refer to this muscle, but it was clearly present in the specimen dissected by us. Concerning *Tupaia*, it was present in the specimens dissected by us and described by Le Gros Clark (1924), Haines (1955) and George (1977), and Jouffroy (1971) corroborated that the muscle is usually found in tree-shrews. This is also the case in *Lemur*, *Propithecus*, *Loris, Nycticebus* and *Tarsius* according to Burmeister (1846), Murie & Mivart (1872), Woollard (1925), Nayak (1933), Jouffroy (1962), Jouffroy (1975), Dylevsky (1967) and Schultz (1984) and to our dissections, in *Callithrix* according to Senft (1907), Beattie (1927) and Dylevsky (1967) and to our observations, and in *Aotus* and *Saimiri* according to our observations. Stanley (1970) found the muscle in four *Pithecia* hands, and stated that it was likely that the muscle was accidentaly removed in the skinning of the six other hands dissected by her; in the two *Pithecia* specimens dissected by us the palmaris brevis was present. Regarding *Macaca*, Howell & Straus (1933) stated that the muscle is usually present in this taxon and it was present in the numerous specimens dissected by Jacobi (1966) and Kimura & Tazai (1970) and by us, as it was in the *Papio* specimens dissected by Macalister (1871) and Swindler & Wood (1973) and by us, in the *Cercopithecus* specimens reported by Hill (1966) and dissected by us, and in the *Colobus* specimens dissected by Polak (1908) and by us. Regarding *Gorilla*, the muscle was not present

in the specimen reported by Bischoff (1880), the fetus dissected by Deniker (1885), the specimen of Hepburn (1892), the specimen of Duckworth (1904), the specimen of Pira (1913), and three of the four specimens of Preuschoft (1965), but was present in the specimen of Duvernoy (1855–1856), the juvenile specimen of Deniker (1885), the specimen of Hofër (1892), the specimen of Sommer (1907), the specimen of Raven (1950), one of the four specimens of Preuschoft (1965), the specimen illustrated by Dylevsky (1967), the two specimens of Sarmiento (1994), our CMS GG1 specimen, and in at least one side of our VU GG1 specimen. According to the reviews of the literature done by Sarmiento (1994) and Gibbs (1999) this muscle is present in 7/9 and 1/2 gorillas, respectively, and according to our own review of the literature and the data obtained in our own dissections, it is present in 11/19 of the cases (i.e. in 58% of cases in *Gorilla*). Regarding *Pan*, the muscle was not present in the specimen dissected by Hepburn (1892), the two specimens of Sarmiento (1994), and the specimen of Wilder (1862), but was present in the specimen of Vrolik (1841), the specimen of Gratiolet & Alix (1866), the two specimens of Humphry (1867), the specimen of Champneys (1872), the specimen of Sonntag (1923), the specimen of Miller (1952), the specimen illustrated by Dylevsky (1967), the specimen of Swindler & Wood (1973) and in four of the five dissected specimens in which we could discern this feature. According to the reviews of the literature done by Sarmiento (1994) and Gibbs (1999) this muscle is present in 7/9 and 4/5 *Pan*, respectively, and according to our own review of the literature and the data obtained from our dissections, it is present in 13/18, i.e. in 72%, chimpanzees. Concerning modern humans, it is present in most cases, being present in all 12 bodies dissected by Sarmiento (1994). [**1**] In *Hylobates* and *Pongo* the palmaris brevis is usually not present as a distinct muscle (i.e. it is present in less than 50% of the cases). Regarding *Hylobates*, Hepburn (1892) stated that the specimen dissected by him had no palmaris brevis, and this was also the case in the three specimens dissected by Kohlbrügge (1890–1892), with Loth (1931)stating that the muscle is always missing in hylobatids and Howell & Straus (1933) and Jouffroy (1971) stating that it is usually absent or poorly developed in these primates. However, such statements are based on previous descriptions of other authors that are, in turn, based in very few dissections. In fact, in one of the two *Hylobates* specimens dissected by us (HU HL1) the muscle was clearly present and well developed and it was also present in the *Hylobates* specimen illustrated by Dylevsky (1967), so according to our own review of the literature and of the data obtained in our own dissections, it is present in 2/7 of the cases, i.e. in about 29% of the cases in hylobatids, because it is absent in the three specimens of Kohlbrügge (1890–1892) and the specimen of Hepburn (1892) and present in one of our two specimens and in the specimen illustrated by Dylevsky (1967). It is actually not clear if the muscle was really missing in all the other five specimens, or if it might have just been removed with the removal of the skin, as is often the case with this little muscle. Neverless, the usual condition for hylobatids does seem to be that in which the palmaris brevis is missing. Regarding *Pongo*, the muscle was not present in the specimen dissected by Hepburn (1892) and the two specimens dissected by Kallner (1956), but Loth (1931) stated that it sometimes present in this taxon and it was present in the two specimens dissected by us, so according to our own review of the literature and of the data obtained from our own dissections, it is present in 2/5, i.e. in 40%, orangutans.

126. *Palmaris brevis is hypertrophied (L 1, AUTAPOMORPHY)*. Contrary to taxa of CS-0 [**0**], in *Colobus* the palmaris brevis is hyperthophied, having two peculiar, distinct, well-developed heads, one on the ulnar side of the hand and the other on the radial side of the hand [**1**]. This condition was described in *Colobus* by, e.g. Polak (1908), and is apparently also present in other Colobinae such as *Procolobus*, but not in *Nasalis*, which seems to lack a radial head according to the descriptions of Schultz (1986). The radial head of the palmaris brevis of *Colobus* is somewhat similar to the muscle palmaris superficialis that is present as an anomaly in tree-shrews such as *Tupaia* (that is why *Tupaia* is coded here as CS-0 and not as CS-1, because this is an anomaly for this taxon). This supports the idea that this palmaris superficialis derives from the flexores breves superficiales of non-mammalian tetrapods, as does the palmaris brevis (e.g. Diogo et al. 2009a). [-] This character is innaplicable in *Hylobates* and *Pongo* because the palmaris brevis is usually absent (see character above).

127. *Flexor digitorum brevis manus is a distinct muscle (L 2, CI 50, RI 0).* [**0**] In basal mammalian clades such as monotremes, as well as numerous other mammalian taxa, including rodents such as *Rattus* and primates, the flexor digitorum brevis manus is usually not present as a distinct muscle (e.g. Jouffroy, 1971; Diogo et al. 2009a). [**1**] In *Tupaia* and other tree-shrews, as well as in *Cynocephalus*, the flexor digitorum brevis manus is usually present as a distinct structure. Regarding *Tupaia*, it was present in the specimens dissected by us and described by Le Gros Clark (1924), Haines (1955), Dylevsky (1967), and George (1977), going from the flexor retinaculum and/or pisiform to the middle phalanx of digit 5. Concerning *Cynocephalus*, the muscle described under the name 'opponens digiti V' by Leche (1886) is very similar, and clearly seems to correspond, to the flexor digitorum brevis manus of *Tupaia*, going also to digit 5 (fig. 11 of Leche, 1886), but because Leche (1886) named this muscle as 'opponens digiti V' Jouffroy (1971) erroneously stated that the flexor digitorum brevis manus is absent in dermopterans.

128. *Lumbricales originate from thin flexor digitorum profundus tendons (L 1, AUTAPOMORPHY).* [**0**] In taxa of CS-0 the lumbricales are mainly originated directly from the main body of the insertion tendons of the flexor digitorum profundus. [**1**] In *Tarsius* these hand muscles are instead originated from peculiar, thin tendons that are, in turn, derived from the main body of the insertion tendons of the flexor digitorum profundus, as shown in figs 49 of Woollard (1925) and 10.17 of Schultz (1984) and corroborated by our own dissections.

129. *There are frequently three, or instead usually seven, lumbricales (unordered multistate character) (L 2, AUTAPOMORPHIES).* [**0**] Most eutherian mammals (e.g. Jouffroy, 1971) including *Rattus* and *Tupaia*, as well as all non-hylobatid primates included in this analysis, have always, or almost always, four lumbricales. This is the case in the *Rattus* and *Tupaia* specimens described by Greene (1935), Le Gros Clark (1924) and George (1977) and dissected by us, in *Lemur*, *Propithecus*, *Loris, Nycticebus* and *Tarsius* according to Burmeister (1846), Mivart & Murie (1865), Murie & Mivart (1872), Barnard (1875), Woollard (1925), Nayak (1933), Straus (1942b), Jouffroy (1962), Jouffroy (1975), Schultz (1984), and to our dissectionsus, in *Callithrix* and *Pithecia* to Senft (1907), Beattie (1927), Stanley (1970) and to our observations, in *Aotus* and *Saimiri* to our dissections, in *Macaca* to Howell & Straus (1933), Kimura & Tazai (1970) and our dissections, in *Cercopithecus* to Hill (1966), Lewis (1989) and

our observations, in *Colobus* to Polak (1908) and our dissections, in *Papio* to Champneys (1872), Swindler & Wood (1973) and our observations, and in all the *Pongo*, *Pan* and *Gorilla* specimens described in the literate and examined by us, as well as in the vast majority of modern humans. [**1**] As explained by Tuttle (1969), in *Hylobates* the fourth lumbrical, i.e. the lumbrical going to digit 5, is frequently missing (it was missing in seven of the *H. lar* hands, but was present in the two hands of *H. pileatus* and in all nine hands of *H. syndactylus* dissected by Tuttle (1969), and was present in the *Hylobates* specimen described by Jouffroy & Lessertisseur (1960), the *Hylobates* specimen reported by Hepburn (1892), the three *Hylobates* specimens studied by Kohlbrügge (1890–1892) and in the gibbon fetus dissected by Deniker (1885), and was present in one of the three hylobatid hands dissected by us: so, according to these numbers, it was missing in nine out of 26 cases (i.e. in about 35% of the cases). [**2**] As described by Leche (1886) and corroborated by our dissections, *Cynocephalus* has a very unusual number of lumbricales, 7, which go to the radial and ulnar sides of digits 2, 3 and 4 and to the radial side of digit 5.

130. *Lumbricales originate from the dorsal surfaces of the tendons of the flexor digitorum profundus (L 1, AUTAPOMORPHY).* [**0**] In taxa of CS-0 the lumbricales are usually mainly originated from the ventral (palmar) surfaces of the tendons of the flexor digitorum profundus. [**1**] As explained by Tuttle (1969) and corroborated by our dissections, in *Hylobates* the lumbricales are mainly originated from the dorsal surfaces of these tendons.

131. *Contrahentes digitorum are missing (L 2, CI 50, RI 50).* [**0**] Most eutherian non-primate mammals (e.g. Jouffroy, 1971), including taxa such as *Rattus*, *Tupaia* and *Cynocephalus*, as well as numerous non-hominoid primates and the hominoids *Hylobates* and *Pan*, have contrahentes digitorum other than the adductor pollicis. As noted by McMurrich (1903a,b), Peterka (1936) and Cihak (1972), *Rattus* usually has contrahentes to digits 2 and 5, and as described by Leche (1886), Haines (1955) and George (1977) and corroborated by our dissections, *Tupaia* and *Cynocephalus* usually have also contrahentes to digits 2 and 5. Concerning *Tarsius*, there was some confusion in the old literature (e.g. Burmeister, 1846; Woollard, 1925; Day & Napier, 1963) between the contrahentes and other hand muscles such as the interossei, but, as explained in the more recent, detailed works of Jouffroy (1971), Day & Iliffe (1975) and Schultz (1984), in this taxon there are usually contrahentes to digits 2, 3, 4 and 5, as corroborated by our dissections. Regarding *Aotus*, *Callithrix,* and *Saimiri*, Brooks (1886a), Jouffroy (1962), Day & Napier (1963) and Dunlap et al. (1985) described contrahentes to digits 2, 4 and 5, and this was also corroborated by our dissections. Stanley (1970) described contrahentes to digits 2 and 5 only, in *Pithecia*, but it is likely that this author neglected the presence of the thin and deep contrahens to digit 4 found in the *Pithecia* specimens dissected by us (that is, the usual condition for *Pithecia* seems to be similar to that found in *Aotus*, *Callithrix* and *Saimiri*). Concerning *Papio* and *Cercopithecus*, contrahentes to digits 2, 4 and 5 were found in our dissections and described by Brooks (1886a), Jouffroy (1962), Hill (1966, 1970), Swindler & Wood (1973) and Lewis (1989), although Day & Napier (1963) stated that in the *P. cynocephalus*, *Papio* sp., *C. mona* and *C. neglectus* specimens dissected by them the contrahens to digit 2 was not present as a separate, fleshy structure; it is however not clear if it was really completely absent, or if it was mainly an aponeurotic structure, as that found in the *P. cynocephalus* specimen dissected by Hill (1970). In *Macaca* species, e.g. *M. mulatta*, *M. nigra* and *M. nemestrina*, there are usually contrahentes to digits 2, 4 and 5, as described by Brooks (1886a), Howell & Straus (1933), Jacobi (1966) and Dunlap et al. (1985), although in one species of this genus, *M. fascicularis*, the contrahens to digit 2 was absent in 13 of the 20 hands dissected by Kimura & Tazai (1970), but present in the single specimen dissected by us. The descriptions of Polak (1908) suggest that there were only contrahentes to digits 2 and 5 in her *Colobus guereza* specimens, but Day & Napier (1963) stated that in the *C. polykomos* sp. hand dissected by them there were contrahentes to digits 4 and 5. However, as the descriptions and illustrations of *C. polykomos* by Jouffroy & Lessertisseur (1959, 1960) and Jouffroy (1971) show three contrahentes to digits 2, 4 and 5, and we also find these fleshy contrahentes to those digits in our *C. guereza* specimen, the presence of three muscles to digits 2, 4 and 5 does seem to be commonly found in *Colobus*, as is also usually the case in *Procolobus* according to Schultz (1986). Regarding *Hylobates*, in the specimens reported by Hartmann (1886; one specimen), Hepburn (1892; one specimen), Fitzwilliams (1910; one specimen) and Lewis (1989; one specimen), one of the three specimens dissected by Kohlbrügge (1890–1892), two of the three specimens dissected by Jouffroy & Lessertisseur (1959), and the specimens dissected by us, there were contrahentes to digits 2, 4 and 5, as was seemingly also the case in the gibbon fetus dissected by Deniker (1885). This is the usual condition for hylobatids according to Jouffroy & Lessertisseur (1959) and Lewis (1989), although Day & Napier (1963) stated that in the specimen dissected by them there were no contrahentes other than the adductor pollicis, Bischoff (1870; Hepburn specimen) and Chapman (1900; one specimen) stated that in the specimens dissected by them there were contrahentes to digits 2 and 5 but not to digit 4 (as was also found in two of the three specimens dissected by Kohlbrügge, 1890–1892), and in one of the three specimens dissected by Jouffroy & Lessertisseur (1959) there was a single fleshy contrahens to digit 5. According to our dissections and our review of the literature, in hylobatids there are contrahentes to digits 2, 4 and 5 in nine out of 15 cases. Regarding *Pan*, in the specimen dissected by Gratiolet & Alix (1866), the two specimens dissected by Jouffroy & Lessertisseur (1959), the two specimens reported by Day & Napier (1963) and four of the five specimens dissected by us in which we could discern this feature the contrahentes were not present as fleshy, well-defined, distinct structures (the exception being PFA 1077), while in the specimen dissected by Brooks (1886a) there were three contrahentes to digits 2, 4 and 5. However, according to Lewis (1989) in *Pan* usually there are contrahentes to digits 4 and 5, as is the case in a specimen described by Hartmann (1886), the specimen dissected by Hepburn (1892), the specimen dissected by Sarmiento (1994), the specimen dissected by Miller (1952), and the specimen reported by Swindler & Wood (1973), and in the review of the literature done by Sarmiento (1994) the contrahentes were effectively present in seven out of seven *Pan.* [**1**] In *Pongo*, *Gorilla* and modern humans there are usually no contrahentes digitorum other than the adductor pollicis. Regarding *Pongo*, the contrahentes were missing and/or aponeurotic in the specimens dissected by Church (1861–1862), Brooks (1886a), Hepburn (1892), Primrose (1899, 1900), Sonntag (1924a), Kallner (1956) and the two specimens dissected by us, although a fleshy contrahens to digit 2 was possibly present in the right hand of the specimen described by Jouffroy & Lessertisseur (1958) and in one specimen illustrated by Langer (1879), while Hartmann (1886) described contrahentes to digits 4 and 5

in an orangutan. Regarding *Gorilla*, the contrahentes were missing in the specimens dissected by Macalister (1873), Deniker (1885), Hartmann (1886), Hepburn (1892), Sommer (1907), Pira (1913), Raven (1950), Preuschoft (1965) and Sarmiento (1994) and by us, and in the review of the literature done by Sarmiento (1994) they were missing in a total of seven out of seven gorillas, but Day & Napier (1963) stated that they did found one contrahens in one of the two specimens dissected by them. It should be noted that according to Jouffroy (1962), Jouffroy (1975), in *Lemur* and *Propithecus* there are usually contrahentes to digits 2, 4 and 5. Regarding *Loris*, Day & Napier (1963) stated that in this taxon there are no contrahentes other than the adductor pollicis, while Ruge (1878), Forster (1917) and Jouffroy (1971) reported that the members of this taxon have contrahentes to digits 2, 3, 4 and 5, and Nayak (1933) described an insertion onto digits 2, 4 and 5 instead. Concerning *Nycticebus*, it has contrahentes to digits 2, 3, 4 and 5 according to Forster (1917) and to digits 2, 4 and 5 according to Day & Napier (1963). However, our observations and comparisons indicate that the common condition for *Lemur*, *Propithecus*, *Nycticebus* and *Loris* is actually similar to that usually present in rats, colugos and tree-shrews. This is because, in all the dissections of these four primate genera, apart from the adductor pollicis (contrahens to digit 1), we only found two fleshy, unequivocal contrahentes going to digits 2 and 5. In fact, at least some of the muscles that other authors have interpreted as 'contrahentes going to digits 3 and 4' very likely correspond to flexores breves profundi *sensu* the present work, because (i) they mainly lie deep (dorsal) to the deep branch of the ulnar nerve and (ii) they often extend distally to attach onto the middle phalanges of digits 3 and 4 (in extant mammals, the contrahentes almost never extend as far distally, inserting instead, almost always, onto the base of the proximal phalanges of the digits).

132. *Two sets of contrahentes digitorum are present (L 1, AUTAPOMORPHY).* Contrary to taxa of CS-0 [**0**], *Tarsius* [**1**] usually has two sets of contrahentes, as reported by Schultz (1984), and corroborated by our dissections. In our *Tarsius syrichta* CMNH M-3135 specimen the first, more superficial (palmar) set corresponds to the structures labeled as '47' in fig. 10.22 of Schultz (1984). That is, these contrahentes are thin muscles running from the contrahens fascia (which is associated to the proximal portion of metacarpal III) to the middle and distal phalanges of digit 5 (only radial margin), 4 (radial and ulnar margins), 3 (radial and ulnar margins) and 2 (only to ulnar margin). The second, deep set is essentially similar to the contrahentes of other primates, lying at the level of the adductor pollicis and being more thin and horizontal (latero-medially oriented), running from the region of metacarpal III to the proximal portion of the proximal phalanx of digit 5 (to radial margin; broad muscle), 4 (to radial margin; thinner muscle), 3 (to radial and ulnar margins; thinner muscle) and 2 (to ulnar margin, broad muscle). Interestingly, the first set is somewhat similar to the flexores breves superficiales of basal tetrapods, because (i) it is superficial to the second set, which, as said above, is essentially similar to the contrahentes of other primates and other mammals; (ii) the contrahentes of this first set that go to digits 3 and 4 go to both margins of these digits, as often do the flexores breves superficiales; and (iii) the contrahentes of this first set are more longitudinally oriented, as often are the flexores breves superficiales. However, distally the contrahentes of the first set are deeply blended with the contrahentes of the second set: this, as well as the fact that in most mammals, including rodents, colugos and tree-shrews, and all other extant primates, the flexores breves superficiales are not present as distinct muscles, does seem to indicate that this first set is effectively derived from the contrahentes, and not from the flexores breves superficiales. [**-**] This character is inapplicable in *Pongo*, *Gorilla* and modern humans because the contrahentes digitorum are usually missing in these taxa (see character above).

133. *There are more than two contrahentes digitorum (L 2, CI 50, RI 87).* [**0**] The plesiomorphic condition for taxa included in this analysis clearly seems to be that found in *Rattus*, *Cynocephalus*, *Tupaia*, *Lemur*, *Propithecus*, *Nycticebus*, *Loris* and *Pan*, in which there are only two fleshy contrahentes (one to digit 2 and one to digit 5 in all these taxa except *Pan*, in which the contrahentes usually go to digits 4 and 5 instead; see characters above). [**1**] In *Tarsius, Aotus, Callithrix, Pithecia, Saimiri, Macaca, Papio, Cercopithecus, Colobus* and *Hylobates,* there are three (to digits 2, 4 and 5 in all these taxa except *Tarsius*: see characters above) or eight (two sets, to digits 2, 3, 4 and 5, in *Tarsius*: see characters above and below). [**-**] This character is innaplicable in *Pongo*, *Gorilla* and modern humans because the contrahentes digitorum are usually missing in these taxa (see characters above).

134. *There are contrahentes digitorum to digits 2, 3, 4 and 5 (L 1, AUTAPOMORPHY).* [**0**] As explained above, plesiomorphically therian mammals do not have four contrahentes digitorum (other than the adductor pollicis) to digits 2, 3, 4 and 5 (see character above). [**1**] However, as also noted above, the presence of contrahentes to digits 2–5 is often found in specimens of *Tarsius* (e.g. Jouffroy, 1971; Day & Iliffe, 1975; Schultz, 1984; our dissections). [**-**] This character is innaplicable in *Pongo*, *Gorilla* and modern humans because the contrahentes digitorum are usually missing in these taxa (see characters above).

135. *Contrahentes digitorum have a peculiar configuration (L 1, AUTAPOMORPHY).* As described by Day & Iliffe (1975), confirmed by Schultz (1984), and corroborated by our dissections, contrary to other primates [**0**], in *Tarsius* the contrahentes have a peculiar configuration, arising from the palm and passing to the proximal and distal phalanges of all the five digits and, in addition, passing from some of the digits to the proximal phalanx of an adjacent digit (according to Day & Iliffe, 1975, this unusual configuration may facilitate the specialised grip pattern in the members of this genus) [**1**]. [**-**] This character is innaplicable in *Pongo*, *Gorilla* and modern humans because the contrahentes digitorum are usually missing in these taxa (see characters above).

136. *Thin, deep additional slip of adductor pollicis (TDAS-AD, or 'interosseous volaris primus of Henle' of modern human anatomy) is present (ordered multistate character) (L 2, CI 100, RI 100).* Lewis (1989), based in Forster's (1917) hypothesis, stated that each palmar interossei of humans corresponds directly to one of the 10 original flexores breves profundi; each dorsal interossei of humans corresponds directly to one of the 10 original flexores breves profundi plus one of the four original intermetacarpales. Mammals plesiomorphically have ten flexores breves profundi and four intermetacarpales (the fourteen muscles being often found in, e.g. marsupials). If we take into account that the flexor pollicis brevis plus opponens pollicis corresponds to the flexor brevis profundus 1, that the flexor digiti minimi brevis + opponens digiti minimi correspond to the flexor brevis profundus 10, and that the dorsal interossei include the intermetacarpales 1, 2, 3 and 4 plus the flexores breves profundi 3,

5, 6 and 8, mammals such as humans also have ten flexores breves profundi and four intermetacarpales (see chars. 139 and 140 below). The so-called 'flexor pollicis brevis' of humans includes part of the flexor brevis profundus 1 and also the flexor brevis profundus 2 (which is often named 'deep head of the flexor pollicis brevis' in humans; see char. 139 below). Therefore, the small structure that is often designated as ''interosseous volaris primus of Henle' in human atlases does not correspond to the flexor brevis profundus 2 of other mammals; it very likely corresponds, instead, to a thin bundle of the oblique head of the adductor pollicis (TDAS-AD *sensu* the present work). In fact, in all the human and non-human primates where we found a TDAS-AD, this structure is often partially blended to the main body of the adductor pollicis, and not to the flexores breves profundi/interossei. As suggested by authors such as Primrose (1899, 1900), it is possible that Henle originally used the name 'interosseous volaris primus' to designate the well-developed structure that corresponds to the true flexor brevis profundus 2 (i.e. to the structure that is nowadays commonly designated as 'deep head of the flexor pollicis brevis' in human anatomy), and that, only later, the name that was originally created by Henle ('interosseous volaris primus') begun to be erroneously used in the literature to designate the TDAS-AD (which is nowadays commonly designated as 'interosseous volaris primus of Henle' in human anatomy). [**0**] TDAS-AD not described in the literature nor found in any dissections. This includes all taxa included in the analysis except *Gorilla*, *Homo* and *Pan*. The TDAS-AD is absent in *Lemur*, *Propithecus*, *Loris, Nycticebus* and *Tarsius* according to Burmeister (1846), Murie & Mivart (1872), Woollard (1925), Nayak (1933), Jouffroy (1962), Jouffroy (1975), Day & Napier (1963), Day & Iliffe (1975), Schultz (1984), and to our dissections, in *Aotus*, *Callithrix*, *Pithecia* and *Saimiri* to Brooks (1886a), Senft (1907), Beattie (1927), Stanley (1970), Dunlap et al. (1985), and to our observations, and in *Cercopithecus* to Hill (1966) and Lewis (1965, 1989) and to our dissections. Also, at least to our knowledge, there is no clear, comprehensive description of a TDAS-AD in any published reports of *Cercopithecus*, *Macaca*, hylobatids and orangutans, i.e. the structure described as 'interosseous volaris primus of Henle' in these taxa actually corresponds to the flexor brevis profundus 2 *sensu* the present work or to other muscles. The TDAS-AD was also not present in any *Cercopithecus*, *Macaca*, *Pongo* and *Hylobates* specimen dissected by us, and only Tuttle (1969) stated that the 'interosseous volaris primus of Henle' of modern human anatomy may be found in a few orangutans, without claryfing in which *Pongo* specimens was this structure found and/or who dissected these specimens. It should be noted that the structure which Brooks (1886a) designated as 'ulnar head of the flexor pollicis brevis' in *Papio* seems to correspond to the 'deep head of the flexor pollicis brevis of modern human anatomy', and, thus, to the flexor brevis profundus 2 *sensu* the present work. Abramowitz (1955) investigated the presence of the 'interosseous volaris primus of Henle' in one specimen of *P. ursinus*, and stated that he did found an 'interosseous volaris primus of Henle', but it is very difficult to discern if this structure does correspond to the TDAS-AS *sensu* the present work. In fact, Polak (1908; *Colobus*), Day & Napier (1963; *Colobus, Papio*), and Swindler & Wood (1973; *Papio*) did not describe an 'interosseous volaris primus of Henle of modern human anatomy' (i.e. a TDAS-AD *sensu* the present work) in specimens of *Colobus* and *Papio*. Also, Susman et al. (1999) explicitely investigated the presence/absence of the 'interosseous volaris primus of Henle' of modern human anatomy, i.e. of the TDAS-AD *sensu* the present work, in two specimens of *P. ursinus*, and they stated that this structure was missing in this species of baboon. Our dissections and comparisons revealed that at least some of the structures that were described in *Colobus* and *Papio* as 'interosseous volaris primus of Henle' by Brooks (1886a) and Abramowitz (1955) and that have been interepreted as a TDAS-AD *sensu* the present work actually correspond, very likely, to other structures (e.g. to the flexor brevis profundus 2 or even to the oblique head of the adductor pollicis; these two latter structures were effectively present, and the TDAS-AD effectively absent, in all the specimens of *Colobus*, *Papio* as well as of the other Old World monkeys, dissected by us); therefore, *Papio* and *Colobus* are coded as CS-0. [**1**] TDAS-AD present in some, but not in most, cases (i.e. in < 50% of the cases). This is the case in *Gorilla* (TDAS-AD described by Huxley, 1864; and Brooks, 1886a; and seemingly present in our CMS GG1 specimen and in one of the four specimens dissected by Preuschoft, 1965; but absent in most gorillas according to Sarmiento, 1994; e.g. was absent in two out of two gorillas dissected by him and in 10 out of 11 gorillas reported in the literature reviewed by him and was also absent in the specimen dissected by Susman et al. 1999; and in three of the four specimens dissected by Preuschoft, 1965; as well as in our VU GG1 specimen). It is also the case in *Pan* (TDAS-AD present in the specimen dissected by Champneys (1872) and probably present in the specimen dissected by Gratiolet & Alix (1866) and the specimen reported by Brooks (1886a), and present in 25% of chimpanzees according to Tuttle (1970), in two out of seven chimpanzees according to the review of the literature done by Sarmiento (1994), and in at least one of the hands of the four specimens dissected by us in which we could discern this feature in detail, although it was not found in the two specimens dissected by Susman et al. (1999) and in the two specimens dissected by Sarmiento (1994); Abramowitz (1955) also supports the idea that the TDAS-AD is present in at least some chimpanzees. [**2**] TDAS-AD usually present (i.e. present in more than 50% of the cases). This occurs in modern humans only (in the studies of Abramowitz, 1955; Lewis, 1989; Susman et al. 1999; and Henkel-Kopleck & Schmidt, 2000; the 'interosseous volaris primus of Henle' of modern human anatomy, i.e. the TDAS-AD *sensu* the present work, was found in 100%, in 92%, in 86%, and in 69% of the modern humans examined, respectively; it was also present in all the six modern human cadavers dissected by us in which we analyzed this feature in detail, as well as in 10 out of 12, i.e. 83%, modern human subjects dissected by Sarmiento, 1994).

137. *Main body of adductor pollicis inserts onto much of metacarpal I (L 1, AUTAPOMORPHY).* [**0**] In most non-primate mammals, including *Rattus*, *Tupaia* and *Cynocephalus*, and in the non-hylobatid primates included in this analysis, the most proximal area of insertion of the main body of the adductor pollicis (i.e. excluding the TDAS-AD, when this structure is present) is usually onto the proximal phalanx of the thumb, the metacarpophalangeal joint and/or the sesamoid bones lying near to this joint and/or eventually onto a small portion of the distal margin of metacarpal I, as well as eventually onto the distal phalanx of the thumb. Church (1861–1862), Brooks (1887) and Sonntag (1924a) stated that in the three *Pongo* specimens dissected by them (one specimen each) the adductor pollicis inserted only onto the proximal phalanx of the thumb, but Michaëlis (1903), Duckworth (1904), Kallner (1956) and Jouffroy & Lessertisseur (1960) suggested that a partial insertion onto a

small part of metacarpal I is frequently found in this genus, and we did find such a partial insertion onto metacarpal I in the single orangutan specimen dissected by us in which we could discern this feature appropriately (GWUANT PP1). What seems to be clear is that all the *Pongo* specimens dissected by us and described in the literature do not have an insertion onto most of metacarpal I, as does *Hylobates* (see below). Regarding the other non-hylobatid hominoids, a partial insertion onto a small part of metacarpal I was described in the *Gorilla* specimen dissected by Raven (1950) and Preuschoft (1965) and the *Pan* specimen dissected by Gratiolet & Alix (1866), and Jouffroy & Lessertisseur (1960) suggested that such a partial insertion is often present in these two taxa. However in the numerous other specimens of these two taxa described and shown in the literature there is no insertion onto metacarpal I, and according to Duckworth (1904) this is effectively the usual condition for these two genera, and we only found an insertion onto the metacarpal II in a few specimens of these taxa. In modern humans there is no substantial insertion onto metacarpal I (e.g. Gibbs, 1999). [**1**] In *Hylobates* the adductor pollicis is directly inserted onto much of metacarpal I (i.e. functionally the muscle becomes an 'adductor' but also an 'opponens' of the thumb: e.g. Jouffroy & Lessertisseur, 1960).

138. *Adductor pollicis has transverse and oblique heads (ordered multistate character) (L 2, CI 100, RI 100).* [**0**] In most non-primate mammals (e.g. Jouffroy, 1971), including *Rattus*, *Tupaia* and *Cynocephalus* (e.g. Greene, 1935; Leche, 1886; Le Gros Clark, 1924; Jouffroy & Lessertisseur, 1971; George, 1977; our dissections), as well as primates such as *Lemur* and *Propithecus* (e.g. Murie & Mivart, 1872; our dissections) and *Loris* and *Nycticebus*, the adductor pollicis is usually not differenciated into distinct transverse and oblique heads. Day & Napier (1963) suggested that these heads are differentiated in *Loris* and *Nycticebus*, but the structure that they designated as 'oblique' head probably corresponds to the flexor brevis profundus 2 *sensu* the present work (see character below). In fact, in at least the *Loris tardigradus* SDZ LT53090 and *Nycticebus coucang* SDZ NC43129 specimens dissected by us, the flexor breves profundus 2 was effectively present as a distinct muscle, and the adductor pollicis was not differentiated into an oblique head and a transverse head; Mivart & Murie (1865) and Murie & Mivart (1872) also suggested that there is no differentiation into oblique and transverse heads in *Nycticebus* and *Loris*, so these genera are coded as CS-0. As noted by Kohlbrügge (1890–1892), Hepburn (1892) and Sonntag (1924b) and corroborated by our dissections, in hominoids, as well as Old World monkeys such as *Papio*, *Colobus, Cercopithecus* and *Macaca* [**2**] the adductor pollicis had distinct oblique and transverse heads; in *Tarsius*, *Aotus*, *Saimiri* and *Pithecia* [**1**] the adductor pollicis is partly differentiated into oblique and transverse heads, particularly at its origin from metacarpal III and the contrahens fascia, but distally the two heads are blended (i.e. the differentiation is not as marked as in taxa scored as CS-2). These heads are slightly differentiated in *Tarsius* according to our dissections and to the descriptions of Jouffroy (1962, 1971), Jouffroy (1975), Day & Napier (1963), Jouffroy & Lessertisseur (1959) and Woollard (1925), as well as in *Saimiri* according to Day & Napier (1963) and to our observations, and in *Aotus* and *Pithecia* according to our dissections, although Stanley (1970) did not report a differentiation in *Pithecia*. Day & Napier (1963), Hill (1970) and Swindler & Wood (1973) stated that these heads are well differentiated in *Papio*, and this was corroborated in our dissections of this taxon. The two heads are also well differentiated in *Cercopithecus* according to Day & Napier (1963) and to our dissections. Regarding *Macaca*, Kimura & Tazai (1970) suggested that the adductor pollicis is not differentiated into transverse and oblique heads in *M. fascicularis*, but their fig. 9, as well as figs 14 of Jacobi (1966) and figs 45 and 46 of Howell & Straus (1933), and also the descriptions of Patterson (1942) and Day & Napier (1963) and our dissections, clearly indicate that the usual condition for *Macaca* is that in which the muscle is well differentiated into these two heads. Polak (1908) and Day & Napier (1963) also stated that these heads are well differentiated in *Colobus* (as they usually are in other Colobinae such as *Procolobus* and *Nasalis* according to Schultz, 1986) and our dissections of *Colobus* corroborated these statements. Deniker (1885), Hepburn (1892) and Sonntag (1924b) stated that the two heads are well differentiated in *Hylobates*, and we did find this configuration in our dissections of this taxon, although Day & Napier (1963) stated that in the *Hylobates* specimen dissected by them the adductor pollicis was not really differentiated into two heads. Day & Napier (1963) state that there is no differentiation of the muscle into two heads in *Callithrix penicillata*, and there was effectively no differentiation in our *C. jacchus* GWUANT CJ1 specimen, but the two heads seem to be present in the *C. jacchus* illustrated in fig. 28 of Beattie (1927); therefore, *Callithrix* is coded as '?'.

139. *Flexor brevis profundus 2 is not a distinct muscle (L 3, CI 33, RI 60).* [**0**] Plesiomorphically eutherian mammals have 10 flexores breves profundi, going to the radial and ulnar sides of the five digits of the hand (e.g. Lewis, 1989; Diogo et al. 2009a); see character 136 above. This condition is found in non-primate taxa such as *Rattus*. In most primates the flexor brevis profundus 2 is usually designated as 'deep head of the flexor pollicis brevis'. Regarding *Rattus*, Greene (1935) described 3 'interossei palmares' and 4 'interossei dorsales', but our dissections clearly show that this taxon has four intermetacarpales and 10 flexores breves profundi (the flexor brevis profundus 1 corresponding to the 'flexor pollicis brevis' and the flexor brevis profundus 10 being differentiated into a flexor digiti minimi brevis and an opponens digiti minimi, as explained by Diogo et al. 2009a). The flexor brevis profundus 2 is usually present as a distinct structure in *Lemur*, *Propithecus*, *Loris, Nycticebus* and *Tarsius*, being often designated in these taxa as an 'oblique head of the adductor pollicis' or as a 'deep head of the flexor pollicis brevis'; our dissections corroborated the presence of this muscle in all these five non-anthropoid genera. The flexor brevis profundus 2 is present in *Papio* according to Brooks (1886a), Day & Napier (1963), Hill (1970), Swindler & Wood (1973) and to our dissections. We did find a flexor brevis profundus 2 in our dissections of *Macaca*, which probably corresponds to the 'deep head of the flexor pollicis brevis' *sensu* Kimura & Tazai (1970), and to the 'superficial bundle of the deep head of the flexor pollicis brevis' *sensu* Howell & Straus (1933), Jacobi (1966) and Hill (1974); the presence of a flexor brevis profundus 2 in this genus was also corroborated by Akiyama (1959) and Day & Napier (1961, 1963). The flexor brevis profundus 2 is present in *Cercopithecus* according to Day & Napier (1963), Lewis (1989). Brooks (1886a) described a 'radial head of the flexor pollicis brevis' and an 'ulnar head of the flexor pollicis brevis' in the *Colobus* sp. specimen dissected by him, but Day & Napier (1963) stated that in the *C. polykomos* hand dissected by them the 'deep head of the flexor pollicis brevis' of modern human anatomy (i.e. the flexor brevis profundus 2 *sensu* the present work) was absent. In the literature review of Dunlap et al. (1985), these authors

stated that the flexor brevis profundus 2 is present in 11 out of 18 specimens of *Colobus*, and we did find this muscle in our *C. guereza* specimen, so we code this genus as CS-0. We clearly found a flexor brevis profundus 2 in *Hylobates*, and this structure was seemingly also found in this taxon by Brooks (1887) and Kohlbrügge (1890–1892). Regarding *Pongo*, we found this structure in the two specimens dissected, as we did in most *Pan* specimens dissected by us (including the right hand of one of the infants – PFA 1077 – we could not find it in the left hand of this infant nor in the single – left – dissected hand of other infant – PFA unc.). We also found a flexor brevis profundus 2 in our dissections of *Gorilla*, and this structure was seemingly also present in, at least, the *Gorilla* specimens reported by Hepburn (1892), Huxley (1864), Macalister (1873), Bischoff (1880), Hartmann (1886) and Raven (1950), although it is possible that part or the totality of the structure that some of these authors designated as 'deep head of the flexor pollicis brevis' actually corresponds to part or the totality of the oblique head of the adductor pollicis *sensu* the present work (for instance, the 'deep head of the flexor pollicis brevis' found in one of the four specimens of Preuschoft, 1965; very likely corresponds to the TDAS-AD *sensu* the present work). [**1**] In *Tupaia* and *Cynocephalus*, as well as in *Aotus*, *Callithrix*, *Pithecia* and *Saimiri*, the flexor brevis profundus 2 is not present as a distinct structure (i.e. it is either missing or completely fused with the part of the flexor brevis profundus 1 that forms the main body of the undivided 'flexor pollicis brevis' of these taxa: e.g. Brooks, 1886a,b; Senft, 1907; Beattie, 1927; Day & Napier, 1963; Stanley, 1970; Dunlap et al. 1985; our dissections).

140. *Flexores breves profundi is fused with the intermetacarpales, forming the dorsal interossei (L 5, CI 20, RI 55).***0**] Plesiomorphically in eutherian mammals the flexores breves profundi are not fused with the intermetacarpales (e.g. Lewis, 1989; Diogo et al. 2009a). This condition is found in adults of non-primate taxa such as *Rattus*, of primates such as *Propithecus, Lemur, Loris, Nycticebus*, *Tarsius*, *Colobus*, *Cercopithecus*, *Macaca*, *Papio* and *Pan*. There are some confusion concerning the descriptions of these muscles in primates, but in *Macaca* there are eight flexores breves profundi, which correspond to the 7 'palmar interossei' plus part or the totality of the 'deep head of the flexor pollicis brevis' *sensu* Howell & Straus (1933), Jacobi (1966), Hill (1974) and Kimura & Tazai (1970). Therefore, together with the 'superficial head of the flexor pollicis brevis' plus the opponens pollicis (both these structures derive from the flexor brevis profundus 1) and with the flexor digiti minimi brevis plus opponens digiti minimi (both these structures derive mainly, or completely, from the flexor brevis profundus 10), *Macaca* has the whole set of 10 flexores breves profundi plus the whole set of four intermetacarpales (which are often designated as 'dorsal interossei). According to the reviews of Jouffroy (1962, 1971), Jouffroy (1975) and to our dissections this condition is also found in *Propithecus, Lemur, Loris, Nycticebus* and *Tarsius*. Regarding *Papio*, Swindler & Wood (1973) suggested that this taxon has 3 'palmar interossei' and 4 'dorsal interossei', but such descriptions clearly seem to be influenced by the comparision with modern humans. This is because from the descriptions of Champneys (1872) and Hill (1970), who stated that *Papio* has '11 interossei', it is clear that *Papio* has a complete or almost complete series of flexores breves produndi plus intermetacarpales. In the *Papio* specimen dissected by us all the flexores breves profundi are effectively present (and are not fused with the intermetacarpales to form the dorsal interossei). We also found this condition in *Cercopithecus* (see also Lewis, 1965, 1989) and in *Colobus* (see also Polak 1908; Lewis, 1965, 1989). [**1**] In adults of *Tupaia*, *Cynocephalus* and extant hominoid taxa except *Pan*, the flexores breves profundi 3, 5, 6 and 8 are usually fused with the intermetacarpales 1, 2, 3 and 4, forming the dorsal interossei 1, 2, 3 and 4, respectively (e.g. Diogo et al. 2009a). Regarding *Pithecia*, *Callithrix*, *Aotus* and *Saimiri*, none of the descriptions available (e.g. Beattie, 1927; Stanley, 1970; Dunlap et al. 1985) refers to a complete series of 10 flexores breves profundi plus a complete series of four intermetacarpales: it is often stated that the 'flexores breves profundi' or the 'interossei' are reduced in number, and that there are four 'dorsal interossei' similar to those of most hominoids (i.e. to the radial sides of digits 2 and 3 and the ulnar sides of digits 3 and 4, their main functional axis thus being digit 3; e.g. Lewis, 1989). This seems to indicate that, as suggested by Lewis (1989), the configuration found in New World monkeys, including *Pithecia*, *Callithrix*, *Aotus* and *Saimiri*, is effectively similar to that found in hominoids other than *Pan*, i.e. that at least some flexores breves profundi are fused with at least some intermetacarpales, to form the dorsal interossei. This was effectively corroborated in our dissections of these New World monkeys; therefore, these four genera are coded as CS-1.

141. *Digit 4 is functional axis of intermetacarpales/dorsal interossei (L 1, CI 100, RI 100).* [**0**] As explained by Jouffroy (1962, 1971), Jouffroy (1975), and corroborated by our dissections, plesiomorphically the intermetacarpales/dorsal interossei are inserted onto the radial sides of digits 2 and 3 and the ulnar sides of digits 3 and 4 (i.e. their functional axis is digit 3); this condition is usually found in *Rattus*, *Cynocephalus*, *Tupaia* and in the non-strepsirrhine primates included in this analysis. [**1**] However, in *Lemur*, *Propithecus, Nycticebus* and *Loris* the insertion is usually onto the radial sides of digits 2, 3 and 4 and the ulnar side of digit 4 (i.e. the functional axis is digit 4; e.g. Forster, 1917; Nayak, 1933; Jouffroy, 1962, 1971; Jouffroy, 1975; our dissections).

142. *Interossei accessorii are present (L 2, CI 50, RI 75).* As described by Huxley (1871), Kohlbrügge (1890–1892), Keith (1894a), Fitzwilliams (1910), Forster (1917, 1933), Jouffroy & Lessertisseur (1960), Tuttle (1969) and Susman et al. (1982), and corroborated in our dissections, contrary to taxa of CS-0 [**0**], hylobatids, as well as *Nycticebus* according to Jouffroy (1962), Jouffroy (1975) and also *Loris*, *Lemur* and *Propithecus* according to us [**1**], have interossei accessorii. Our dissections corroborated the statements of Jouffroy (1962; i.e. in the dissected specimens of *Nycticebus*, but also of *Loris*, *Lemur* and *Propithecus*, at least some of the flexores breves profundi/intermetacarpales extend distally to almost reach, or to actually reach, the middle phalanges of digits 2, 3, 4 and/or 5). That is, the structures that are designated as interossei accessorii in *Hylobates*, which are mainly derived from the distal portion of the flexores breves profundi/intermetacarpales. are also present in these strepsirrhine genera. It is usually accepted that the interossei accessorii are not present in *Tarsius*, and the hand muscles that reach the middle phalanges of digits 2, 3, 4 and/or 5 in this taxon are often considered to be 'contrahentes' (e.g. fig. 2 of Day & Iliffe, 1975; fig. 10.21 of Schultz, 1984; see also characters above). However, as explained above, at least part of some of the flexores breves profundi/intermetacarpales (the muscles from which the interossei accessorii are derived) of the four strepshirines taxa listed above are often also interpreted as 'contrahentes', so it is possible that the structures that Day & Iliffe (1975) and Schultz (1984)

designated as 'contrahentes' in *Tarsius* also include part of the interossei accessorii *sensu* the present work. Therefore, although we mainly follow Day & Iliffe (1975) and Schultz (1984) and consider the 'contrahentes' reported by these authors likely correspond to the contrahentes *sensu* the present work, one cannot completely discard the hypothesis that they also include the interossei accessorii *sensu* the present work; we thus code *Tarsius* as '?'.

143. *Opponens pollicis is a distinct muscle (L 2, CI 50, RI 75).* [**0**] In numerous eutherian non-primate mammals, including *Rattus*, *Cynocephalus* and *Tupaia* (e.g. Jouffroy, 1971; Lewis, 1989; Diogo et al. 2009a), as well as in primates such as *Callithrix*, the opponens pollicis is usually not present as a distinct muscle (this was corroborated in numerous *Callithrix* specimens by Beattie, 1927; Jouffroy & Lessertisseur, 1960; Day & Napier, 1963 and by us, although a 'diminutive opponens pollicis' was reported in the three *Callithrix* specimens dissected by Dunlap et al. 1985; and two *Callithrix* specimens by Senft, 1907). [**1**] In all the other taxa included in this analysis there is usually a distinct opponens pollicis. Allen (1897) stated that there is no opponens pollicis in *Tarsius*, but in all the specimens of this genus dissected by Burmeister (1846), Woollard (1925), Schultz (1984) and by us, the opponens pollicis was present. Also, Stanley (1970) suggested that the opponens pollicis was not present as a distinct muscle in nine of the 10 hands of *Pithecia monachus* dissected by her, but her descriptions concerning this feature are somewhat confuse. The fact that she stated that in nine of the 10 hands the 'flexor pollicis brevis' attached onto the metacarpal I, together with our observations and comparisons, indicates that the opponens pollicis was actually probably present in those nine hands dissected by her; the muscle was effectively present in both *Pithecia* specimens dissected by us. Day & Napier (1963) suggested that the opponens pollicis is not present as a distinct muscle in *Loris* and *Nycticebus*. However, in all the specimens of these two genera dissected by us the muscle was thin, but clearly present, running mainly from the sesamoid bone associated with the trapezium, to the distal portion of metacarpal I and, in VU NP1, even to the base of the proximal phalanx of the thumb. Therefore, *Loris* and *Nycticebus* are coded as CS-1.

144. *Opponens pollicis reaches the distal portion of metacarpal I (L 2, CI 50, RI 80).* [**0**] In primates such as *Lemur*, *Propithecus*, *Tarsius*, *Aotus*, *Pithecia* and *Saimiri*, the opponens pollicis usually inserts onto metacarpal I but does not reach the distal portion of this bone. According to Jouffroy (1962), Jouffroy (1975), in *Lemur* and *Propithecus* it inserts onto approximately the proximal 2/3 of this bone, and according to Murie & Mivart (1872), in *Lemur* the muscle inserts exclusively onto the base of metacarpal I. In our *Lemur* specimen the attachment was onto the proximal 2/3 of metacarpal I, while in our *Propithecus* specimen it was onto the proximal 3/4 of this bone. Dunlap et al. (1985) stated that in *Tarsius* the muscle also does not reach the distal portion of metacarpal I, and in our *Tarsius* specimen the insertion was effectively onto the proximal 1/2 of this bone. Dunlap et al. (1985) suggested that in *Aotus* and *Saimiri* the opponens pollicis does reach the distal portion of metacarpal I, but in all the *Aotus*, *Saimiri* and *Pithecia* specimens dissected by us this muscle inserts only onto the proximal 2/3 of this bone. [**1**] In *Loris*, *Nycticebus*, *Macaca*, *Papio*, *Colobus, Cercopithecus* and extant hominoids the opponens pollicis usually extends to the distal portion of metacarpal I, inserting partially, or exclusively, onto this distal portion and/or onto the phalanges of the thumb (regarding *Loris* and *Nycticebus*, see character above). In all non-hylobatid hominoids described in the literature and dissected by us the opponens pollicis extends to the distal portion of metacarpal I, but does not extend further to the proximal and/or distal phalanges of the thumb. This is also the case in *Macaca* according to Howell & Straus (1933) and to our dissections, in *Colobus* and other Colobinae to Polak (1908) and Schultz (1986) and our dissections, in *Papio* as illustrated by Brooks (1886a) and Swindler & Wood (1973) and corroborated by us, and in *Cercopithecus* as illustrated in fig. 9.5B of Lewis (1989) and corroborated by us. Regarding hylobatids, the insertion extends to the proximal phalanx of the thumb in the specimen described by Fitzwilliams (1910) and in one of the three specimen reported by Kohlbrügge (1890–1892), and to both the proximal and distal phalanges of the thumb in the specimen described by Hepburn (1892), but extended only to the distal portion of the metacarpal I in the specimens described by Brooks (1887) and dissected by us and in two of the three specimens reported by Kohlbrügge (1890–1892). [**-**] Innaplicable in taxa in which the opponens pollicis is usually not present as a distinct muscle.

145. *Opponens pollicis inserts onto the proximal and/or the distal phalanges of the thumb (L 1, AUTAPOMORPHY).* Contrary to taxa of CS-0 [**0**], in hylobatids [**1**] the opponens pollicis is often partially inserted onto the proximal and/or distal phalanges of the thumb (see character above). As explained in the characters above, in one of the two *Nycticebus pygmaeus* specimens dissected by us (VU NP1) the muscle also reached the proximal phalanx of the thumb, but in the other specimen of this species (VU NP2), as well as in the single *Nycticebus coucang* specimen (SDZ NC43129) and the single *Loris tardigradus* (SDZ LT53090) specimen where we analyzed this feature in detail, the muscle only attached onto the metacarpal I and/or the metacarpophalangeal joint of digit 1; therefore, *Nycticebus* and *Loris* are coded here as CS-0. [**-**] Innaplicable in taxa in which the opponens pollicis is not present as a distinct muscle or in which this muscle does not extend distally to the proximal portion of metacarpal I.

146. *Flexor digiti minimi brevis is partly originated from the pisiform (L 2, CI 50, RI 0).* [**0**] In numerous non-primate eutherian mammals, including *Rattus* and *Tupaia*, and the non-hylobatid primates included in this analysis, the flexor digiti minimi brevis usually originates from the hamate, flexor retinaculum and/or surrounding structures such as metacarpal V, but not from the pisiform. Regarding *Rattus*, according to Greene (1935) in originates from the hamate. Concerning *Tupaia*, according to Le Gros Clark (1924) it originates from the flexor retinaculum, and according to George (1977) it originates from the flexor retinaculum and metacarpal V. In *Lemur*, *Propithecus*, *Loris, Nycticebus* and *Tarsius* the origin is usually from the hamate and often also the flexor retinaculum, as noted by Murie & Mivart (1872), Woollard (1925), Jouffroy (1962), Jouffroy (1975) and Schultz (1984) and corroborated by our dissections. In *Callithrix* it originates from the hamate and flexor retinaculum according to Brooks (1886a) and to our dissections, and from the hamate according to Senft (1907) and Beattie (1927), while in *Pithecia* it originates from the flexor retinaculum according to Stanley (1970) and from the hamate and flexor retinaculum according to our dissections, as was also the case in the *Aotus* and *Saimiri* specimens dissected by us. Regarding *Macaca*, according to Howell & Straus (1933), Patterson (1942), Jacobi (1966) and Kimura & Tazai (1970) and to our dissections it originates mainly from the flexor retinaculum and not from the pisiform, while in *Cercopithecus* it mainly originates from the flexor retinaculum

according to Lewis (1989) and to our dissections, in *Colobus* it originates from the flexor retinaculum and hamate according to Polak (1908) and to our observations, and in *Papio* it originates from the flexor retinaculum and often from the hamate according to Champneys (1872), Brooks (1886a) and Swindler & Wood (1973), and mainly from the flexor retinaculum according to our dissections. Concerning *Pongo*, Primrose (1899, 1900), Sonntag (1924a) and Kallner (1956) describe an origin from the hamate and flexor retinaculum, and we found an origin from the flexor retinaculum. In *Gorilla*, Macalister (1873), Duckworth (1904) and Raven (1950) describe an origin from the hamate, and Preuschoft (1965) also found an origin from the hamate in two of his four specimens, while we found an origin from this bone and the flexor retinaculum in our VU GG1 and CMS GG1 specimens, as did Hepburn (1892). Within the literature reviewed by us a direct attachment to the pisiform was only reported in two of the four gorillas dissected by Preuschoft (1965). Regarding *Pan*, an origin from the hamate and flexor retinaculum was found by Gratiolet & Alix (1866), Sonntag (1923) and Swindler & Wood (1973), and Miller (1952) decribed an origin from the flexor retinaculum only, while we founded an origin from the flexor retinaculum and, often, also from the hamate. In modern humans the muscle usually originates from the flexor retinaculum and hamate (e.g. Gibbs, 1999). [**1**] In *Cynocephalus* and hylobatids the muscle is often partially originated from the pisiform. Regarding *Cynocephalus*, we found an origin from the flexor retinaculum and the pisiform. Concerning *Hylobates*, an origin from the pisiform, flexor retinaculum and hamate was found by Fitzwilliams (1910) and by us (in our HU HL1 specimen), and Kohlbrügge (1890–1892) suggested that in one of the three specimens dissected by him there is also an origin from the pisiform together with the abductor digiti minimi, although Hepburn (1892) described an origin from the flexor retinaculum and hamate only, and Deniker (1885) only referred to an origin from the hamate in the gibbon fetus dissected by him.

147. *Flexor digiti minimi brevis inserts onto the middle phalanx and/or the distal phalanx of digit 5 (L 2, CI 50, RI 0).* Contrary to taxa of CS-0, in which the flexor digiti minimi brevis inserts mainly onto the metacarpophalangeal joint, the base or middle of the proximal phalanx and/or the extensor expansion of digit 5 [**0**], in hylobatids and in *Nycticebus* this muscle is often also inserted onto the middle phalanx and/or the distal phalanx of digit 5 [**1**]. In all non-hylobatid hominoids described in the literature and dissected by us the muscle does not extend to the middle and/or distal phalanges of digit 5. This is also the case in *Lemur*, *Propithecus* and *Tarsius* according to Murie & Mivart (1872), Woollard (1925), Jouffroy (1962), Jouffroy (1975), Schultz (1984), and our dissections, in *Callithrix, Aotus, Saimiri* and *Pithecia* to Senft (1907), Beattie (1927), Stanley (1970), and our observations, in *Macaca* to Howell & Straus (1933), Patterson (1942), Jacobi (1966), Kimura & Tazai (1970), and our dissections, in *Papio* to Champneys (1872), Brooks (1886a), Swindler & Wood (1973), and our dissections, in *Cercopithecus* to Lewis (1989) and our observations, and in *Colobus* to Polak (1908), Jouffroy & Lessertisseur (1959, 1960), Jouffroy (1971) and our dissections. Regarding hylobatids, the insertion extends to the proximal and middle phalanges of digit 5 in the specimens described by Fitzwilliams (1910) and Tuttle (1969) and to the distal porton of the proximal phalanx of this digit in the specimens described by Hepburn (1892) and Sonntag (1924a,b). Kohlbrügge (1890–1892) suggested that this was also the case in at least some of the hylobatids dissected by him, although Deniker (1885) only referred to an insertion onto the base of the proximal phalanx in the gibbon fetus dissected by him (in the hylobatid specimens dissected by us it was not possible to appropriately discern if the insertion also extended distally to the base of the proximal phalanx of digit 1). Regarding *Nycticebus*, in the specimens of this genus dissected by us the flexor digiti minimi brevis reaches the middle phalanx of the thumb. We could not discern if this was also the case in the single *Loris* specimen dissected by us; as there is almost no information in the literature about this feature in this taxon, *Loris* is coded as '?'.

148. *Opponens digiti minimi is a distinct muscle (L 2, CI 50, RI 50).* [**0**] In numerous eutherian non-primate mammals, including *Cynocephalus* and *Tupaia*, there is no separate opponens digiti minimi (e.g. Jouffroy, 1971; Diogo et al. 2009a). [**1**] A separate opponens digiti minimi is present in *Rattus* and in all primates included in the present analysis (Beattie, 1927 suggested that the opponens digiti minimi is not present as a distinct muscle in *Callithrix jacchus*, but Brooks, 1886a reported an opponens digiti minimi ('f5u') in this genus; as we also found this muscle in the *C. jacchus* specimen dissected by us, *Callithrix* is coded as CS-1).

149. *Opponens digiti minimi is divided into superficial and deep bundles (ordered multistate character) (L 2, CI 100, RI 100).* [**0**] Within those taxa with an opponens digiti minimi, in non-primate mammals, including *Rattus*, and all non-Catarrhini primates included in this analysis, this muscle is usually undivided. Greene (1935) did not refer to a division of the muscle in *Rattus*, nor did Burmeister (1846), Murie & Mivart (1872), Brooks (1886a), Woollard (1925), Jouffroy (1962), Jouffroy (1975), Stanley (1970) and Schultz (1984) in *Lemur*, *Propithecus*, *Loris, Nycticebus*, *Tarsius*, *Callithrix* and *Pithecia*. The opponens digiti minimi was effectively undivided in the members of these seven genera, as well as of *Aotus* and *Saimiri*, dissected by us. As noted by Brooks (1886a), Kohlbrügge (1890–1892), Lewis (1989) and Diogo et al. (2009a), and corroborated by our dissections, in hominoids [**1**] the muscle is usually slightly differentiated into superficial and deep bundles, while in *Papio*, *Colobus*, *Cercopithecus* and *Macaca* [**2**] the muscle is remarkably divided into a more superficial head and a deeper and broader head that, due to their peculiar differentiation, are often considered to be different muscles (corresponding, for instance, to the 'f5op' and 'a5op' muscles *sensu* Brooks, 1886a and to the '10s' and 'opponens digiti minimi' *sensu* Lewis, 1989; : e.g. fig. 5 of Brooks, 1886a). This latter condition was effectively described and illustrated by Brooks (1886a) and corroborated by us in *Papio*, and found in *Colobus* by Brooks (1886a; and the statements of Polak, 1908 seem to corroborate Brooks' descriptions) and by us. It was also described and illustrated in *Cercopithecus* by Hill (1966) and Lewis (1989), who stated that this condition is also found in most other Old World monkeys, in which the '10s' *sensu* Lewis (1989) and thus the 'f5op' *sensu* Brooks (1886a) is often confused with a 'radial head of the abductor digiti minimi'; our dissections of *Cercopithecus* corroborated the statements of these authors. However, it should be noted that the radial head of the abductor digiti minimi described in *Macaca* by Howell & Straus (1933), Jacobi (1966), Kimura & Tazai (1970) and Hill (1974) clearly seems to correspond to the true radial head of the abductor digiti minimi found in other Old World monkeys such as *Papio* (compare e.g. this fig. 45 with fig. 5 of Brooks, 1886a) and not to the flexor digiti minimi brevis, as suggested by Lewis (1989). In fact, Lewis (1989) hypothesis would imply that the 'flexor digiti minimi brevis' *sensu* Howell & Straus

(1933), Jacobi (1966), Kimura & Tazai (1970) and Hill (1974) corresponds to the superficial head of the opponens digiti minimi *sensu* the present work. This is unlikely, because this structure actually attaches onto the proximal phalanx and/or expansor extension of digit 5, and not onto metacarpal V, as does the superficial head of the opponens digiti minimi in other Old World monkeys such as *Papio* (e.g. Brooks, 1886a) and *Cercopithecus* (Lewis, 1989). In fact, the 'f5op' *sensu* Brooks (1886a) corresponds to the most ulnar of the two bundles of the 'contrahens to digit 5' described by Howell & Straus (1933), Jacobi (1966), Kimura & Tazai (1970) and Hill (1974). Lewis (1989) stated that the opponens digiti minimi is more markedly divided in hominoids such as *Pan* and modern humans than in hominoids such as hylobatids, and Brooks (1886a) stated that, contrary to *Pan* and modern humans, in hominoids such as *Pongo* there are no superficial and deep bundles of the muscle separated by the deep branch of the ulnar nerve. Regarding our dissections, in hylobatids, *Gorilla* and *Pongo* the deep branch of the ulnar nerve runs mainly radial to both these bundles, and not mainly superficially (palmar) to the deep bundle and deep (dorsal) to the superficial bundle as is usually the case in *Pan* and particularly in modern humans. [-] Innaplicable in *Tupaia* and *Cynocephalus*, in which the opponens digiti minimi is not present as a distinct muscle.

150. *I Insertion of opponens digiti minimi extends proximally to the distal part of metacarpal V (L 1, CI 100, RI 100).* [**0**] As explained by Brooks (1886a), plesiomorphically the opponens digiti minimi inserts mainly onto the proximal phalanx of digit 5 and/or the distal part of metacarpal V; this condition is for instance found in *Rattus* (Greene, 1935 describes an insertion onto the distal part of metacarpal V in this taxon). [**1**] In all the primates included in this analysis the insertion of the opponens digiti minimi extends to the distal portion of metacarpal V, the muscle being thus inserted along most, or the whole, proximodistal length of this bone. Such an insertion along most, or the whole extent of this bone is found in all primate specimens dissected by us, and also described in *Lemur* and *Propithecus* by Murie & Mivart (1872) and Jouffroy (1962), Jouffroy (1975), *Tarsius* by Woollard (1925), *Pithecia* by Stanley (1970), *Cercopithecus* by Lewis (1989) and by us, *Papio* and *Colobus* by Brooks (1886a; who confusingly designated the opponens digiti minimi as 'f5op' and 'a5op' in these two taxa) and also by Polak (1908), Swindler & Wood (1973) and by us, *Macaca* by us and by Howell & Straus (1933) and Jacobi (1966; who confusingly designated the opponens digiti minimi as 'M.c.d.V(1) and M.o.d.V'), and hominoids by us and all reports in the literature. [-] Innaplicable in *Cynocephalus* and *Tupaia*, in which the opponens digiti minimi is not present as a distinct muscle.

151. *Abductor digiti minimi is divided into two well differentiated heads (L 1, CI 100, RI 100).* In some taxa of CS-0 the abductor digiti minimi may be slightly divided at its origin [**0**], but in *Macaca* and *Papio* [**1**] there is often a differentiation of this muscle into two heads, which in some cases are so markedly separated from each other that they are only connected through their distal tendons (e.g. fig. 5 of Brooks, 1886a). Such a differentiation is not present in *Rattus*, *Cynocephalus* and *Tupaia*, nor in *Lemur*, *Propithecus*, *Loris, Nycticebus, Loris* and *Tarsius* according to Burmeister (1846), Murie & Mivart (1872), Woollard (1925), Jouffroy (1962), Jouffroy (1975), Schultz (1984) and our dissections, in *Callithrix* and *Pithecia* to Brooks (1886a), Beattie (1927), Stanley (1970) and our observations, in *Aotus* and *Saimiri* to our dissections, and in *Colobus* to Polak (1908), Jouffroy (1971), and our dissections. Regarding non-human hominoids, there are no well-separated heads of the abductor digiti minimi in any of the specimens dissected by us or reported in the literature that we reviewed, except in two of the three specimens examined by Kohlbrügge (1890–1892), in which there was only a slight differentiation into two bundles, and perhaps in the *Pongo* specimen described by Richmond (1993; in which this muscle apparently had 'deep' and 'superficial' heads – but these heads were not found in the orangutans reported by Primrose, 1899, 1900; Hepburn, 1892; Sonntag, 1924a; Sullivan & Osgood, 1927; Kallner, 1956; and Jouffroy & Lessertisseur, 1960; and dissected by us). Regarding *Papio*, two heads of the abductor digiti minimi were shown in fig. 5 of Brooks (1886a) and also present in our dissections, although they were not shown in the *P. anubis* specimen illustrated in plate 78 of Swindler & Wood (1973). Concerning *Macaca*, the radial head of the abductor digiti minimi described by Howell & Straus (1933), Jacobi (1966) and Kimura & Tazai (1970) and Hill (1974) clearly seems to correspond to the true radial head of the abductor digiti minimi found by us in *M. fascicularis*, and this idea is supported by Patterson's (1942) descriptions of five hypothenar structures in *Macaca*, which he designated as 'two heads of the abductor digiti minimi', 'two heads of the flexor digiti minimi brevis' and an 'opponens digiti minimi': it is very likely that two of the former structures correspond to the lateral and medial heads of the abductor digiti minimi *sensu* the present work. Hill (1966) stated that *Cercopithecus* usually has 'ulnar and radial heads' of the abductor digiti minimi, but these probably correspond respectively to the abductor digiti minimi and flexor digiti minimi brevis *sensu* Lewis (1989) and the present work (the 'short flexor of the little finger' and the 'flexor ossis metacarpi digiti minimi' *sensu* Hill, 1966 thus probably correspond respectively to the superficial and deep heads of the opponens digiti minimi *sensu* Lewis, 1989 and the present work). This is because in the descriptions and illustrations of *Cercopithecus* provided by Lewis (1989), as well as in our dissections of this taxon, the abductor digiti minimi is clearly undivided. Regarding modern humans, in three of the six subjects dissected by us the abductor digiti minimi was mainly undivided, but in the other three subjects there was a superficial, broad head and a deep, thin additional head. The presence of such heads is not so unusual in modern humans, according to Sanudo et al. (1993), Curry et al. (2000), Kanaya et al. (2002), Murata et al. (2004) and Gusmão et al. (2005), but it is not clear if the presence of these heads represents, or not, the common condition for modern humans; therefore *Homo* is coded as '?'.

Dorsal forearm muscles

152. *Brachioradialis often inserts onto the trapezium (L 1, AUTAPOMORPHY).* Contrary to taxa of CS-0 [**0**], in *Tarsius* [**1**] the brachioradialis is often inserted onto the trapezium. It was inserted onto this bone in the specimens of Allen (1897) and of Schultz (1984), while an exclusive insertion onto the radius was described in the specimens of Burmeister (1846) and of Woollard (1925). However, it is not clear if these latter authors examined this feature in detail or if they were influenced by the fact that this muscle is almost always inserted onto the radius in other primates and/or by the fact that, although in the specimens of Allen (1897) and Schultz (1984) the muscle goes to the trapezium, it is still held down firmly to the radius. As

the *Tarsius* specimen dissected by us did have an insertion onto the trapezium, *Tarsius* is coded as CS-1.

153. *Extensor carpi radialis longus does not insert onto the metacarpal II (L 1, AUTAPOMORPHY).* Contrary to taxa of CS-0 [**0**], in *Cynocephalus* the extensor carpi radialis longus is not inserted onto the metacarpal II, being usually exclusively inserted onto the trapezium (e.g. Leche, 1886; our dissections) [**1**].

154. *Brachioradialis is not a distinct muscle (L 1, AUTAPOMORPHY).* The brachioradialis is present as a distinct structure in most mammals, including the phylogenetically plesiomorphic monotremes [**0**], but it is missing (within all the taxa included in this analysis) in *Rattus* (e.g. Greene, 1935; our dissections) [**1**].

155. *Supinator has no ulnar head (L 2, CI 50, RI 83).* [**0**] Plesiomorphically in mammals the supinator has a single, humeral head (i.e. the supinator mainly originates from the humerus and/or the elbow joint capsule and/or elbow ligaments: Straus, 1941a,b; Jouffroy, 1971); this condition is found for instance in *Tupaia*, *Rattus* and *Cynocephalus* and in *Lemur*, *Propithecus* and *Tarsius*. In *Rattus* the muscle originates from the humerus as noted by Greene (1935), in *Cynocephalus* from elbow ligaments as noted by Leche (1886) and in *Tupaia* from the humerus and elbow capsule as described by George (1977). The bony origin is exclusively from the humerus in *Lemur* and *Propithecus* according to Murie & Mivart (1872), Jouffroy (1962), Jouffroy (1975), and to our dissections. Miller (1932) stated that in *Tarsius* there is a bony origin from the humerus and ulna, but in all the *Tarsius* specimens dissected by Burmeister (1846), Woollard (1925), Straus (1941a), Schultz (1984), and by us, the bony origin is from the humerus only. [**1**] *Loris, Nycticebus* (and also *Perodicticus*) and anthropoids such as *Pithecia*, *Callithrix*, *Aotus*, *Saimiri*, *Macaca*, *Cercopithecus* and *Papio* and non-hylobatid hominoids usually have a distinct ulnar head of the supinator originating from the posterior portion of the ulna. The bony origin in *Pithecia* is usually from the humerus and ulna according to our dissections and to Ziemer (1972; because a bony origin from both these bones was found in seven of the 10 limbs that she dissected; in the other three limbs the bony origin was from the humerus only). A bony origin from the humerus and ulna in also present in *Callithrix*, *Aotus* and *Saimiri* according to our dissections, in *Loris* and *Nycticebus* to Miller (1943) and our observations, in *Macaca* to Howell & Straus (1933), Straus (1941a), Patterson (1942), Kimura & Tazai (1970), Nagashima (1976), and our observations, in *Colobus* to Polak (1908) and our dissections, in *Cercopithecus* to Miller (1932), Hill (1966), Lewis (1989), and our dissections, and in *Papio* to Champneys (1872), Miller (1932), Straus (1941a), Swindler & Wood (1973), and our observations. In *Pongo* the origin was from the humerus and ulna in the specimens described by Beddard (1893), Primrose (1899, 1900), Sonntag (1924a) and Sullivan & Osgood (1927) and dissected by us, although it was only from the ulna in the specimens reported by Barnard (1875), Straus (1941a) and Kallner (1956). In *Gorilla* the origin is from the humerus and ulna according to Raven (1950) and Preuschoft (1965) and to our dissections, as is the case in *Pan* according to Gratiolet & Alix (1866), Champneys (1872), Beddard (1893), Straus (1941a), Miller (1952), Swindler & Wood (1973) and to our dissections. Regarding *Hylobates*, according to Straus (1941a) the supinator has ulnar and humeral heads, and this was precisely the condition found in the three specimens dissected by Kohlbrügge (1890–1892) and the HU HL1 specimen dissected by us, and the vast majority of authors agree that all hominoid genera usually have these two heads (e.g. Miller, 1932; Jouffroy, 1971; Lewis, 1989; Gibbs, 1999). However, Michilsens et al. (2009) stated that, within the 11 *Hylobates* specimens dissected by them (three *H. lar*, two *H. pileatus*, two *H. moloch* and four *H. syndactylus*), the muscle originated from the humerus only, except in the three specimens of *H. lar*, in which the muscle connected to the ulna. This contradicts the statements of Kohlbrügge (1890–1892) and Straus (1941a), according to which an ulnar head is also present in other hylobatid species such as *H. moloch* and *H. syndactylus* (while Michilsens et al. 2009 stated that they did not found such an ulnar head in six specimens of these two latter species). In view of the data available, it is difficult to discern if this is the result of a true variation within this latter species and within the hylobatids in general, or if these contradictory statements are instead due to an error of Michilsens et al. (2009). Therefore, until we have more data about hylobatids, *Hylobates* is coded as '?'.

156. *Extensor carpi ulnaris does not originate from the ulna (L 2, CI 50, RI 85).* [**0**] In numerous therian mammals, including marsupials (e.g. Jouffroy, 1971), the extensor carpi ulnaris originates from both the ulna and lateral epicondyle of the humerus. This condition is found in *Tupaia* and *Cynocephalus* and all the primates included in this analysis except New World monkeys and Old World monkeys. In *Cynocephalus* the bony origin is from the ulna and the lateral epicondyle of the humerus, as noted by Leche (1886). According to Jouffroy (1962) and George (1977) in tree-shrews the extensor carpi ulnaris usually originates from the lateral epicondyle, but not from the ulna, although it is continuous with the anconeus, which does attach onto the olecranon process of the ulna. This condition was described in *Tupaia* by George (1977) and in *Ptilocercus* by Le Gros Clark (1926). However, in the *Tupaia* specimens dissected by Le Gros Clark (1924), Straus (1941a) and by us the muscle has a direct origin from the ulna and the lateral condyle of the humerus: therefore, a partial origin from the ulna seems to be a common condition in *Tupaia*, which is thus coded as CS-0. In *Lemur*, *Propithecus*, *Loris, Nycticebus* and *Tarsius* there is a bony origin from the ulna and radius according to Burmeister (1846), Mivart & Murie (1865), Murie & Mivart (1872), Woollard (1925), Straus (1941a), Miller (1943), Jouffroy (1962), Jouffroy (1975) and our dissections, although we could not find an origin from the ulna in one of the three *Nycticebus* specimens dissected by us (SDZ NC43129). In *Hylobates* the muscle originates from the ulna and humerus as noted by Kohlbrügge (1890–1892), Straus (1941a) and Michilsens et al. (2009) and corroborated by us. In *Pongo* the origin is from the humerus and ulna in the specimens described by Beddard (1893), Primrose (1899, 1900), Sonntag (1924a), Sullivan & Osgood (1927) and Straus (1941a) and dissected by us, and at least partially from the ulna in the specimens reported by Fick (1895a,b), although Kohlbrügge (1897) and Kallner (1956) described a bony origin from the humerus only. In *Gorilla* the origin is from the humerus and ulna according to Raven (1950) and to our dissections and from the ulna and indirectly from the humerus (via the antebrachial fascia, intermuscular septum and/or the tendon of the extensor digitorum) according to Preuschoft (1965). In *Pan* the origin is from the ulna and humerus as described by Gratiolet & Alix (1866), Champneys (1872), Sonntag (1923), Straus (1941a), Miller (1952), Swindler & Wood (1973) and corroborated by us, while in modern humans the muscle usually originates from the ulna and humerus (e.g. Gibbs, 1999). [**1**] As stated by Straus (1941a), in various New and Old World monkeys, including *Pithecia*,

Saimiri, *Callithrix*, *Aotus*, *Macaca*, *Cercopithecus, Colobus* and *Papio*, the extensor carpi ulnaris originates mainly from the lateral epicondyle and does not have a direct bony origin from the ulna. This is the case in *Pithecia* according to Ziemer (1972) and to our dissections, in *Aotus* and *Saimiri* to our observations, in *Macaca* to Howell & Straus (1933), Straus (1941a), Kimura & Tazai (1970) and Nagashima (1976), although there were apparently a few fibers originating from the ulna in our *Macaca* VU MF1 specimen. A ulnar head is missing in *Cercopithecus* according to Hill (1966) and our dissections, in *Colobus* and other Colobinae to Schultz (1986) and our observations, and in *Papio* to Champneys (1872), Straus (1941a), Hill (1970), Swindler & Wood (1973), and our dissections. It should be noted that, in at least some New and/or Old World monkeys, at first sight one may have the impression that the muscle also originates from the ulna, because it is indirectly attached to this bone by strong fascia. This was probably what led, for instance, Beattie (1927) to state that in *Callithrix* there is an origin from the ulna; however, in the *Callithrix* specimens dissected by us and by other authors (e.g. Senft, 1907) there is effectively no direct bony origin of the muscle from the ulna. Our review of the literature indicated that an origin from both the humerus and ulna is apparently found in at least some members of the genus *Rattus*, but Greene (1935) and Jouffroy (1971) stated that in this genus the muscle originates from the lateral epicondyle of the humerus only; until more information is available, *Rattus* is thus coded as '?'.

157. *Anconeus is not a distinct muscle (L 1, AUTAPOMORPHY)*. Contrary to taxa of CS-0 [**0**], in *Hylobates* [**1**] the anconeus is usually not present as a distinct muscle, being undifferentiated from the extensor carpi ulnaris, as noted by Duckworth (1904) and corroborated by the descriptions of Kohlbrügge (1890–1892), Hepburn (1892), Payne (2001) and Michilsens et al. (2009) and by our dissections. In taxa of CS-0 the muscle is often blended with the triceps brachii and/or the extensor carpi radialis, but can be recognized as a distinct muscle. This is the case in the *Rattus*, *Tupaia* and *Cynocephalus* specimens described by Greene (1935), Leche (1886) and George (1977) and dissected by us, although Le Gros Clark (1924) stated that the muscle was absent in the *Tupaia* specimen dissected by him. It is also the case in *Lemur*, *Propithecus*, *Loris, Nycticebus* and *Tarsius* according to our dissections and to Burmeister (1846), Murie & Mivart (1872), Allen (1897), Woollard (1925), Miller (1943), Jouffroy (1962), Jouffroy (1975), and Schultz (1984; note that Milne-Edwards & Grandidier, 1875 suggested that the anconeus is missing in *Propithecus*, but, as explained by Jouffroy, 1962; this muscle corresponds very likely to part of the structure that those authors designated as 'triceps brachii'). It is also the case in *Callithrix* and *Pithecia* according to Beattie (1927) and Ziemer (1972) and our dissections, in *Aotus* and *Saimiri* to our observations, in *Macaca* to Howell & Straus (1933), Straus (1941a), Patterson (1942), Hadano (1955), Jacobi (1966), Kimura & Tazai (1970), Nagashima (1976) and our dissections, in *Colobus* to Polak (1908) and our observations, in *Cercopithecus* to Hill (1966) and our dissections, in *Pongo* to Beddard (1893), Primrose (1899, 1900), Sonntag (1924a) and our dissections, in *Gorilla* to Duvernoy (1855–1856), Macalister (1873), Chapman (1878), Bischoff (1880), Deniker (1885), Hepburn (1892), Sommer (1907), Pira (1913), Raven (1950), Preuschoft (1965), Payne (2001) and our dissections, and in *Pan* to Gratiolet & Alix (1866), Macalister (1871), Champneys (1872), Sonntag (1923), Miller (1952), Swindler & Wood (1973), Payne (2001) and our dissections. Hill (1970) suggested that the anconeus was not differentiated in the *Papio hamadryas* dissected by him, but this structure was recognized as a separate muscle in *P. hamadryas* by Macalister (1871), who designated this muscle as 'anconeus lateralis', and in *P. anubis* by Champneys (1872), Swindler & Wood (1973) and by us; *Papio* is thus coded as CS-0.

158. *Extensor digiti quarti is not a distinct muscle (L 1, CI 100, RI 100).* [**0**] As explained by Diogo et al. (2009a), the plesiomorphic condition for the taxa included in this analysis is very likely that in which there is a distinct muscle extensor digiti quarti going to digit 4 and also a so-called 'extensor digiti quinti proprius' going to digit 5. This condition is found in various non-primate mammals, including *Rattus* (e.g. Greene, 1935; Diogo et al. 2009a; our dissections). [**1**] In the other taxa included in the cladistic analysis the extensor digiti quarti is completely fused with the so-called 'extensor digiti quinti proprius', the two fused muscles forming the extensor digiti minimi, which often inserts onto digits 4 and 5, but may insert instead onto digits 3–5, or to digit 5 only (Diogo et al. 2009a; see characters below; it should be noted that the 'extensor digiti quarti proprius' and 'extensor digiti quinti proprius' described in primates such as *Macaca* and *Papio* by authors as Howell & Straus, 1933; Straus, 1941a,b; and Kimura & Tazai, 1970 actually form a single, continuous muscle belly with two tendons, which corresponds to the extensor digiti minimi *sensu* the present work).

159. *Extensor digiti minimi inserts onto digit 5 only (L 3, CI 33, RI 60).* [**0**] Plesiomorphically the extensor digiti minimi (or the extensor digiti quarti plus the 'extensor digiti quinti proprius', in *Rattus*) inserts onto two or more digits – usually onto digits 4 and 5, but sometimes also onto digit 3, see character below (e.g. Kaneff & Cihak, 1970; Jouffroy, 1971; Diogo et al. 2009a). In *Rattus* the extensor digit quarti and the 'extensor digiti quinti proprius' go to digits 4 and 5, respectively, as noted by Greene (1935). In *Cynocephalus*, the extensor digiti minimi goes to digits 3–5, as described by Leche (1886), while this muscle goes to digits 4–5 in *Tupaia*, as noted by Le Gros Clark (1924), Straus (1941a), George (1977) and Kaneff (1980a,b), as well as in *Lemur*, *Propithecus* and *Tarsius* according to Burmeister (1846), Murie & Mivart (1872), Allen (1897), Woollard (1925), Straus (1941a), Jouffroy (1962), Jouffroy (1975), Kaneff & Cihak (1970), Kaneff (1979, 1980a), Schultz (1984), and to our dissections, in *Aotus*, *Callithrix, Saimiri* and *Pithecia* to Senft (1907), Beattie (1927), Ziemer (1972) and Kaneff (1980a) and to our observations, in *Cercopithecus* to Hill (1966), Lewis (1989) and our dissections, and in *Macaca* to Haughton (1865), Howell & Straus (1933), Straus (1941a), Patterson (1942), Kimura & Tazai (1970), Nagashima (1976), Kaneff (1980a), Aziz & Dunlap (1986), and our observations. The muscle also goes to digits 4 and 5 in *Colobus* according to Polak (1908), Kaneff & Cihak (1970), Kaneff (1980a) and to our observations, although Jouffroy (1962) found a tendon to digit 5 only, on the left hand of a *Colobus* specimen. Hill (1970) stated that he did not found a tendon to digit 5 in one specimen of *Papio hamadryas*, but in the numerous *Papio* specimens dissected by Champneys (1872), Michaëlis (1903), Straus (1941a), Swindler & Wood (1973), Kaneff (1980a) and by us the muscle inserted onto digits 4–5. In the *Pongo* specimens described by Church (1861–1862), Barnard (1875), Langer (1879), Chapman (1880), Hepburn (1892), Beddard (1893), Kohlbrügge (1897), Primrose (1899, 1900), Sonntag (1924a), Sullivan & Osgood (1927), Straus (1941a), Kallner (1956), Kaneff (1980a), Aziz & Dunlap (1986) and Oishi et al. (2008, 2009) the muscle goes to digits 4 and 5, and according to the review of the literature

done by Gibbs (1999) such an insertion onto these two digits occurs in 20 out of 23 orangutans. [**1**] In *Loris* and *Nycticebus* (and also in *Perodicticus*), as well as in *Hylobates*, *Gorilla*, *Pan* and modern humans, the muscle usually inserts onto digit 5 only. This is the case in all the *Hylobates* specimens dissected by Bischoff (1870), Deniker (1885), Hartmann (1886), Kohlbrügge (1890–1892), Hepburn (1892), Chapman (1900), Straus (1941a), Kaneff (1980a), Michilsens et al. (2009), and by us. Regarding *Gorilla*, in the specimens described by Owen (1868), Chapman (1878), Bischoff (1880), Deniker (1885), Hepburn (1892), Sommer (1907), Pira (1913), Straus (1941a), Raven (1950), Preuschoft (1965), Kaneff (1980a) and Aziz & Dunlap (1986) and dissected by us the muscle goes to digit 5 only, although an insertion onto digits 4 and 5 was reported on one side of one specimen dissected by Preuschoft (1965) and an insertion onto digit 4 only was described in the specimen dissected by Macalister (1873). According to the review of the literature done by Gibbs (1999), an extra insertion onto digit 4 occurs in only one out of 14 gorillas, and according to the review of the literature done by Straus (1941a) this occurs in only 7% of gorillas. Regarding *Pan*, in the specimens described by Wilder (1862), Gratiolet & Alix (1866), Macalister (1871), Champneys (1872), Chapman (1879), Hepburn (1892), MacDowell (1910), Sonntag (1923), Miller (1952), Swindler & Wood (1973), Aziz & Dunlap (1986), Landsmeer (1986), and Oishi et al. (2009), as well as in three of the six specimens dissected by us in which we could discern this feature in detail, in three specimens dissected by Straus (1941a), and one specimen dissected by Kaneff (1980a), the muscle goes to digit 5 only. In the three other specimens dissected by us, one specimen dissected by Huxley (1864), one specimen dissected by Dwight (1895), one specimen dissected by Straus (1941a), four specimens dissected by Kaneff (1980a), and one specimen dissected by Lewis (1989), the muscle goes to digits 4 and 5. According to the review of the literature done by Gibbs (1999) an exclusive insertion onto digit 5 occurs in 26 out of 31 *Pan*; it occurs in 73% *Pan* according to the review of the literature done by Straus (1941a). Regarding modern humans, the muscle usually goes to digit 5 only; according to the review of the literature done by Straus (1941a), an insertion onto both digits 4 and 5 occurs only in about 6–11% of the cases, but a more recent study of 200 upper limbs of modern human adults by Kaneff & Cihak (1970) showed that an insertion onto digits 4 and 5 actually only occurs in about 3% of the cases (interestingly, within 100 upper limbs of modern human fetuses, these latter authors found that in 10% of the cases there was an insertion onto digits 4 and 5). Regarding *Loris*, Mivart & Murie (1865) and Murie & Mivart (1872) stated that in their specimen of '*Nycticebus tardigradus*' (=*Loris tardigradus*) the extensor digiti minimi goes to digit 5, but they also stated that in this specimen the extensor digitorum sends two tendons to digit 4, so the 'extra' tendon to digit 4 could actually be a tendon of the extensor digiti minimi. They also stated that in another specimen, of '*Loris gracilis*' (also = *Loris tardigradus*), the extensor digiti minimi goes to digits 4 and 5; however, in page 37 of Murie & Mivart (1872) they clearly stated that they consider that in both these specimens the extensor digiti minimi goes to digit 5 only, and that the two tendons going to digit 4 in both specimens are really part of the extensor digitorum. This latter idea was later corroborated by Barnard (1875) and Miller (1943), who reported an exclusive insertion onto digit 5 in all the *Loris* specimens dissected by them. An exclusive insertion onto digit 5 was also reported in the three *Nycticebus* specimens dissected by Miller (1943; and also in the *Perodicticus* specimens dissected by her), as well as in one of the two *Nycticebus* specimens dissected by us (VU NP 1). Therefore, within a total of five *Nycticebus* specimens dissected by Miller (1943) and by us, only in one (VU NP2; we could not find and analyze this muscle in our SDZ NC43129 and SDZ LT53090 specimens) has an insertion onto both digits 4 and 5.

160. *Extensor digiti minimi is partially inserted onto digit 3 (L 1, AUTAPOMORPHY)*. Contrary to the other taxa included in the cladistic analysis [**0**], *Cynocephalus* [**1**] exhibits a peculiar, derived condition (e.g. Kaneff & Cihak, 1970; Jouffroy, 1971; Nagashima, 1976) in which the extensor digiti minimi inserts onto digit 3 (as well as onto digits 4 and 5, see character above).

161. *Extensor digiti minimi originates from the radius (L 1, AUTAPOMORPHY)*. [**0**] In taxa of CS-0 the extensor digiti minimi (or the extensor digiti quarti plus the 'extensor digiti quinti proprius', in *Rattus*) has a bony origin from the lateral epicondyle of the humerus and/or, less often, from the ulna, but usually not from the radius. It should be noted that Champneys (1872) and Hill (1970) found a partial origin of this muscle from a small portion of fascia associated with the radius in a few specimens of *Papio*, but even in this case there was no direct bony origin of the muscle from this bone. In the other *Papio* specimens described by Straus (1941a) and Swindler & Wood (1973), and dissected by us, the bony origin of the muscle was from the humerus only). In *Cynocephalus* [**1**] the extensor digiti minimi has a bony origin from the lateral epicondyle but also from the radius, as described by Leche (1886).

162. *Extensor indicis usually inserts onto digits 1–3, digits 2–4 or digit 2 only (unordered multistate character) (L 4, CI 75, RI 83).* [**0**] The plesiomorphic condition for the taxa included in the cladistic analysis, found in numerous non-primate taxa, including *Rattus* and *Tupaia*, and in numerous primates, including *Loris, Nycticebus, Tarsius*, *Macaca*, *Papio, Cercopithecus, Colobus* and *Pongo*, is that in which the extensor indicis usually inserts onto digits 2 and 3 (e.g. Jouffroy, 1971; Diogo et al., 2009b). In *Rattus* and *Tupaia* the muscle usually sends tendons to digits 2 and 3, as noted by Greene (1935), Le Gros Clark (1924), Straus (1941a), Jouffroy (1962), George (1977) and Kaneff (1980a), although in a few *Tupaia* specimens the muscle may also insert onto digit 1 and/or digit 4, as stressed by Le Gros Clark (1924) and George (1977). In *Loris* there was an insertion onto digits 2–3 in two cases reported by Meckel (1820–1838), two cases reported by Miller (1943), one case reported by Barnard (1875), and apparently also in the SDZ LT53090 specimen dissected by us, while there was an insertion onto digit 2 only in two cases reported by Murie & Mivart (1872), onto digits 2–4 in one case reported by these authors, and onto digits 2–5 in still another case reported by Murie & Mivart (1872; so, within the information available, there is an insertion onto digitis 2–3 in six out of 10 cases, in *Loris*). In *Nycticebus* the insertion is usually onto digits 2 and 3 only, although an insertion onto digit 4, and even onto digit 5, might be found in members of this genus according to Barnard (1875); within a total of six *Nycticebus* specimens dissected by Miller (1943; three specimens) and by us (three specimens) the insertion was always to digits 2 and 3, except in our specimen VU NP2, in which there was an insertion onto digit 2 only. In *Macaca* the muscle usually goes to digits 2 and 3, as described by Haughton (1865), Howell & Straus (1933), Straus (1941a), Patterson (1942), Kimura & Tazai (1970), Nagashima (1976), Kaneff (1980a), Dunlap et al. (1985) and Aziz & Dunlap (1986) and found by us; only in one of the 30 upper limbs

dissected by Nagashima (1976) this muscle goes to digits 2 and 3 but also sends a small slip to digit 5. In *Cercopithecus* it goes to digits 2 and 3 according to Hill (1966), Lewis (1989) and to our dissections, as it does in *Colobus* according to Polak (1908), Jouffroy (1962), Kaneff (1980b) and to our observations. In *Papio* the muscle almost always goes to digits 2 and 3, as reported by Macalister (1871), Champneys (1872), MacDowell (1910), Straus (1941a), Swindler & Wood (1973) and Kaneff (1980a) and found by us; only in two of the 10 *Papio* upper limbs dissected by Kaneff (1980a) the muscle goes exclusively to digit 2. Regarding *Pongo*, an insertion onto digits 2 and 3 was described by most authors, including Langer (1879), Chapman (1880), Hepburn (1892), Beddard (1893), Primrose (1899, 1900), Sullivan & Osgood (1927), Straus (1941a), Kallner (1956), Day & Napier (1963), Tuttle (1969), Tuttle & Cortright (1988), Richmond (1993) and Oishi et al. (2008, 2009) and found in one of the specimens dissected by us. In one of the eight specimens dissected by Kaneff (1980a,b) and the specimen dissected by Sonntag (1924a) the muscle inserted onto digit 2 only, while Barnard (1875) described an insertion onto digits 2, 3 and 4, Church (1861–1862) described an insertion onto metacarpals II and/or III, and in the other specimen dissected by us the insertion was onto digits 1, 2 and 3. According to the review of the literature done by Straus (1941a,b), in *Pongo* an insertion on digits 2, 3, 4 and 5 occurs in about 5% of the cases, on digits 2, 3 and 4 occurs in about 11% of the cases, on digits 2 and 3 occurs in about 66% of the cases, on digit 3 occurs in about 13% of the cases, and on digit 2 occurs in about 5% of the cases. Regarding *Tarsius*, there was an insertion onto digits 2–3 in one case reported by Burmeister (1846), in three cases reported by Woollard (1925), in two cases reported by Schultz (1984), and in two cases reported by Kaneff (1980a), while there was an insertion onto 2–4 in one case reported by Straus (1941a), one case reported by Woollard (1925), and two cases reported by Kaneff (1980a), and there was an insertion onto 2–5 in one case reported by Straus (1941a), in one case reported by Kaneff (1980a), and in the CMNH M-3135 specimen dissected by us. Therefore, within the information available, there is an insertion onto digits 2–3 in eight out of 15 cases, and that is why *Tarsius* is coded as CS-0. However, it should be noted that, in the CMNH M-3135 specimen dissected by us the extensor indicis gives rise to a strong and broad fascia that is then associated with two well-defined tendons going to digits 2 and 3, respectively, but also to strong connective tissue that was almost like a tendon, and that attached to both digits 4 and 5. We consider that the extensor indicis thus goes to digits 2, 3, 4 and 5, but is is probable that some authors have seen a similar configuration and stated, in their descriptions, that the muscle attached to digits 2 and 3 only. That is, although an insertion onto digits 2–3 seem to be the usual condition for *Tarsius*, is is possible that insertions to other digits are more frequent than it is usually suggested in the literature. [**1**] In *Cynocephalus* the muscle is commonly inserted onto digits 1, 2 and 3, as described by Leche (1886) and corroborated by our dissections. [**2**] In *Aotus*, *Saimiri*, *Pithecia*, *Callithrix* and *Hylobates* the muscle is commonly inserted onto digits 2, 3 and 4. Concerning *Aotus*, *Callithrix* and *Saimiri*, the insertion is onto digits 2, 3 and 4 according to our dissections and to Barnard (1875), Beattie (1927), Ziemer (1972), Kaneff (1980b) and Dunlap et al. (1985), Aziz & Dunlap (1986) state that in the four *Saimiri* specimens dissected by them the extensor indicis goes to digits 2, 3, but these four specimens are the ones reported by Dunlap et al. 1985; and they actually go to digits 2–4 as explained in this latter work; it should also be noted that the nomeclature used by Senft, 1907 suggests that in *Callithrix* the extensor indicis also goes to digit V, but such an insertion onto this digit is not described nor illustrated in that work). Regarding *Pithecia*, in our VU PP1 specimen the insertion was onto digits 2–4, in one limb dissected by Ziemer (1972) and in our GWUANT PP1 specimen it was onto digits 2 and 3, in the other limb dissected by Ziemer (1972) it was onto digits 2 and 4, but in the eight other limbs dissected by this latter author it was onto digits 2–4, as reported by Barnard (1875). Therefore, although there is some variation in *Pithecia*, the usual condition for this genus clearly seems to be that in which the muscle usually goes to digits 2–4. Concerning *Hylobates*, an insertion onto digits 2, 3 and 4 was described by Bischoff (1870), Kohlbrügge (1890–1892), Hepburn (1892), Chapman (1900), Jouffroy (1962), Kaneff (1980a,b), Aziz & Dunlap (1986) and Michilsens et al. (2009) and found by us, but in the gibbon fetus dissected by Deniker (1885) the insertion was onto digits 2–5, while Barnard (1875) described an insertion onto digit 3 only and Straus (1941a) onto digits 2 and 3 or 2, 3, and 4. According to the review of the literature done by Straus (1941a,b), in *Hylobates* an insertion onto digits 2, 3, 4 and 5 occurs in about 7.5% of the cases, and on digits 2, 3 and 4 occurs in about 92% of the cases. [**3**] In *Gorilla*, *Pan* and modern humans the muscle is commonly inserted onto digit 2 only. Regarding *Gorilla*, an insertion onto digit 2 was found by most authors, including Owen (1868), Macalister (1873), Barnard (1875), Chapman (1878), Deniker (1885), Hepburn (1892), Sommer (1907), Straus (1941a), Preuschoft (1965), Aziz & Dunlap (1986) and Lewis (1989) and also found in our CMS GG1 specimen. According to the review of the literature by Straus (1941a,b), in *Gorilla* an exclusive insertion onto digit 2 occurs in nearly all of the cases, but our observations and comparisons indicate that there are actually a few exceptions, e.g. Raven (1950) described an insertion onto digit 2 plus the hamate and capitate, and Kaneff (1980a,b) reported an insertion onto metacarpals III and/or IV only (as we found on one side of our VU GG1 specimen, the other side showing an attachment to these two metacarpals and to digit 2). Concerning *Pan*, an insertion onto digit 2 is described by most authors, including Wilder (1862), Gratiolet & Alix (1866), Broca (1869), Champneys (1872), Chapman (1879), Beddard (1893), Dwight (1895), Sonntag (1923), Fick (1925), Miller (1952), Tuttle (1969), Swindler & Wood (1973), Dunlap et al. (1985), Landsmeer (1986) and Lewis (1989) and Oishi et al. (2009) and found in the vast majority of the specimens dissected by us. However, Hepburn (1892) found an insertion onto digits 2 and 4, Straus (1941a) and Kaneff (1980a,b) onto digit 2 or onto digits 2 and 3, and Humphry (1867), Macalister (1871), Hartmann (1886), MacDowell (1910), Ribbing & Hermansson (1912) and Jouffroy & Lessertisseur (1957) onto digits 2 and 3. According to the review of the literature done by Straus (1941a,b), in *Pan* an insertion onto digits 2, 3 and 4 occurs in about 4% of the cases, onto digits 2 and 3 occurs in about 21% of the cases, onto digits 2 and 4 occurs in about 4% of the cases, onto digit 3 occurs in about 4% of the cases, and onto digit 2 occurs in about 68% of the cases. According to the review of the literature done by Straus (1941a,b), in modern humans an insertion onto digits 2, 3 and 4 is very rare, onto digits 2 and 3 occurs in about 5–13% of the cases, and onto digit 2 occurs in about 87–95% of the cases; within 300 modern human upper limbs analyzed by Kaneff (1980b), an insertion onto digits 2 and 3 was found in about 12.67% of the cases. Regarding *Lemur*, there was an insertion

onto digits 2–4 in one case described by Barnard (1875), in one case reported by Kaneff (1980a), and one case reported by Murie & Mivart (1872), while there was an insertion onto digits 2–3 in one case reported by Jouffroy (1962), in one case reported by Kaneff (1980a), and in the GWUANT LC1 specimens dissected by us: so, within the information available, there is an insertion onto digits 2–4 in three out of six cases. In *Propithecus* there was an insertion onto digits 2–4 in one case reported by Ronsse (1922) and two cases reported by Jouffroy (1962), while there was an insertion onto digits 2–3 in two cases reported by Jouffroy (1962) and in our GWUANT PV 1 specimen; therefore, there is also an insertion onto 2–4 in three out of six cases. *Lemur* and *Propithecus* are thus coded as '?'.

163. *Extensor pollicis longus is deeply blended with the extensor indicis (L 3, CI 33, RI 60).* As noted by Jouffroy (1962) and Dunlap et al. (1985), contrary to taxa such as *Rattus* and *Cynocephalus*, as well as to the vast majority of non-platyrrhine primates, including strepsirhines and *Tarsius* [**0**], in *Tupaia* and New World monkeys, including *Aotus*, *Callithrix*, *Pithecia* and *Saimiri*, as well as in *Colobus*, the extensor pollicis longus is usually deeply blended with the extensor indicis, forming a mainly undivided fleshy belly (which is often designated as 'extensor digitorum profundus') [**1**]. This was corroborated by our dissections of all taxa of CS-1 and reported in *Callithrix* by Barnard (1875), Duckworth (1904), Senft (1907), Beattie (1927), Hill (1957), Kaneff (1980b) and Dunlap et al. (1985), in *Aotus* by Kanneff (1980b) and Dunlap et al. (1985), in *Saimiri* by Dunlap et al. (1985) and Aziz & Dunlap (1986), and in *Pithecia* by Ziemer (1972). Le Gros Clark (1924), Jouffroy (1962) and George (1977) stated that in *Tupaia* the extensor pollicis longus is also deeply blended with the extensor indicis, and our own dissections confirmed the descriptions of these authors: *Tupaia* is thus also coded as CS-1. As explained by Jouffroy & Lessertisseur (1960) and Jouffroy (1962), it is often said (e.g. Polak, 1908; Straus, 1941a,b) that in *Colobus* the extensor pollicis longus is reduced to a thin structure originating from the extensor indicis, or is even missing. However, in this genus there is actually usually an extensor pollicis longus going to both digits 1 and 2, which is deeply blended distally with the extensor indicis going to digits 2 and 3 (perhaps the statements of Polak, 1908 and Straus, 1941a,b – according to which the extensor pollicis longus is missing – are precisely due to the deep blending between this muscle and the extensor indicis, in this taxon). This idea was supported by the work of Kaneff (1980a,b): in the two *Colobus* specimens dissected by this author, there is effectively an extensor sending tendons to digits 2–3 and another extensor sending tendons to digits 1–2 (e.g. fig. 62 of Kaneff 1980b). Our dissections of *Colobus* effectively corroborated the descriptions of Jouffroy & Lessertisseur (1960), Jouffroy (1962) and Kaneff (1980a,b), so this taxon is coded as CS-1.

164. *Extensor pollicis longus plus extensor indicis send two tendons to digit 2 (L 2, CI 50, RI 75).* As noted by Dunlap et al. (1985), within the tendons of the extensor pollicis longus and of the extensor indicis only one goes, plesiomorphically, to digit 2 (usually, one of the tendons of the extensor indicis). In a few specimens of genera of CS-0 the extensor pollicis longus might send a tendon to both digits 1 and 2, as for instance in a single *Pan troglodytes* specimen and a single *Lemur catta* specimen reported by Kaneff (1980a,b). However, as noted by this latter author, and also by authors such as Straus (1941a,b), the presence of such a configuration is extremely rare in any of these genera, and we effectively never found such a configuration in any of the numerous dissected specimens of taxa of CS-0 [**0**]. However, in *Saimiri*, *Callithrix*, *Aotus* and *Pithecia*, as well as in *Colobus*, there are often two tendons going to digit 2, i.e. contrary to taxa of CS-0, in these genera the extensor pollicis longus sends a tendon not only to digit 1, but also to digit 2 [**1**]. An insertion of the extensor pollicis longus onto digits 1 and 2 was present in all *Saimiri* specimens dissected by Dunlap et al. (1985), Aziz & Dunlap (1986), and by us, in the *Callithrix* specimen dissected by us and the four *Callithrix* specimens dissected by Kaneff (1980a,b), although Senft (1907) only described a single tendon (of the complex formed by the extensor pollicis longus plus the extensor indicis) going to digit 2, in the two *Callithrix* specimens dissected by him. There is some confusion about this feature in *Aotus*, with Kaneff's (1980a,b) and Dunlap et al.'s (1985) descriptions suggesting that this complex sends a single tendon to digit 2 in this taxon. However, our dissections of this taxon revealed that the extensor pollicis longus actually sends tendons to both digits 1 and 2, as found in all the New World monkeys dissected by us (so, the complex does send two tendons to digit 2, in total). In *Pithecia* the extensor pollicis longus usually goes to digits 1 and 2, as shown in fig. 16 of Ziemer (1972) and as found in our dissections. Regarding *Colobus*, the extensor pollicis longus usually goes to both digits 1 and 2 (see character above). Schultz (1984) reported an attachment to digit 1 in two specimens of *Tarsius*, and we also found this configuration in our *Tarsius* specimen, but in all the six specimens of this genus dissected by Straus (1941a) and Woollard (1925) and in two of the five hands dissected by Kaneff (1980a,b), the extensor pollicis longus was said to insert onto digits 1 and 2. As there is some confusion in the literature between the tendons of the extensor pollicis longus and of the extensor indicis, it is not clear if in all these latter cases the insertion of the extensor pollicis longus is really to both digits 1 and 2; therefore, until more information is available, *Tarsius* is coded as '?'.

165. *Abductor pollicis longus extends to the proximal phalanx of the thumb (L 2, CI 50, RI 0).* [**0**] According to Jouffroy (1971), Kaneff (1979, 1980a,b) and Lewis (1989), in therian mammals the abductor pollicis longus is plesiomorphically inserted onto the carpal region and/or the metacarpal I, but not onto the proximal phalanx of the thumb. This plesiomorphic condition is found in non-primate mammals such as *Tupaia* and in most primates, including *Propithecus*, *Lemur*, *Loris, Nycticebus*, *Tarsius*, *Aotus*, *Callithrix*, *Pithecia*, *Saimiri*, *Macaca*, *Cercopithecus*, *Papio*, *Colobus*, *Hylobates*, *Pongo* and *Pan*. [**1**] In gorillas and modern humans there is usually a distal extension of the abductor pollicis longus, or of a structure differentiated from it (the extensor pollicis brevis, in modern humans: see character below), to the proximal phalanx of the thumb. One needs to be very careful about this feature, because, contrary to the present work, some authors consider that some non-human and non-hylobatid taxa have a separate 'extensor pollicis brevis'; so, the insertion of their 'abductor pollicis longus' corresponds only to part of the insertion of the abductor pollicis longus *sensu* the present work. In order to avoid confusion, all the insertions to which we refer here correspond to the insertions of the 'abductor polllicis longus' plus the 'extensor pollicis brevis'. Regarding *Tupaia*, George (1977) states that the insertion is onto the sesamoid bone, trapezium and metacarpal I, but Le Gros Clark (1924) states that it is onto metacarpal I only, and Straus (1941a,b) states that it is onto the sesamoid bone and the trapezium. Regarding *Lemur*, the abductor pollicis longus goes to metacarpal I according to Murie & Mivart (1872) and to this bone, the sesamoid and the

trapezium according to Jouffroy (1962), Jouffroy (1975) and to our dissections, as is also the case in *Propithecus* according to this latter author and also to our dissections. In *Loris* and *Nycticebus* it goes to metacarpal I according to Mivart & Murie (1865) and Murie & Mivart (1872), and to this bone and the sesamoid according to Miller (1943) and to our dissections, while in *Tarsius* it goes to metacarpal I according to Straus (1941a), Burmeister (1846) and Woollard (1925), and to this bone and the sesamoid according to Schultz (1984) and to our dissections. Concerning *Aotus*, *Callithrix*, *Pithecia* and *Saimiri*, the insertion is usually onto metacarpal I and often onto the carpal region according to Senft (1907), Beattie (1927), Hill (1957, 1960, 1962), Ziemer (1972) and Kaneff (1980a) and to our dissections. Concerning *Cercopithecus*, Hill (1966) reported an insertion onto the metacarpal I and the trapezium, as found by us, and Lewis (1989) reported an insertion onto the metacarpal I and onto the trapezium and/or the adjacent sesamoid bone. With respect to *Colobus*, Polak (1908) reported an insertion onto a sesamoid bone of the carpal region and onto the metacarpal I, as found by us, and Kaneff (1980a) stated that the muscle attaches onto the carpal and metacarpal regions of digit 1. Regarding *Macaca*, it is almost always to the metacarpal I and to the sesamoid and/or trapezium, as described by Howell & Straus (1933), Straus (1941a), Patterson (1942), Kimura & Tazai (1970), Nagashima (1976) and found by us, although in one of the 30 *Macaca fascicularis* upper limbs dissected by Nagashima (1976) there was also a partial insertion onto the scaphoid. Regarding *Papio*, an insertion onto the trapezium and metacarpal I was reported by Straus (1941a), onto the trapezoid and metacarpal I by Champneys (1872) and Hill (1970), and onto the metacarpal 1 and sesamoid by Swindler & Wood (1973; and also found by us). In *Hylobates* the insertion it onto the metacarpal I and sesamoid and/or trapezium according to Hepburn (1892), Hartmann (1886), Kohlbrügge (1890–1892), Straus (1941a), Lorenz (1974), Chapman (1900), and to our dissection of VU HG1, and to the sesamoid only in our HU HL1 specimen, although Deniker (1885) described an insertion onto the metacarpal I and the proximal phalanx of the thumb in the gibbon fetus dissected by him. According to Gibbs (1999) the common insertion in hylobatids is onto the metacarpal and sesamoid and/or and trapezium. Regarding *Pongo*, it is to the sesamoid and metacarpal I according to Hepburn (1892) and Sonntag (1924a), to the sesamoid, trapezium and metacarpal I according to Primrose (1899, 1900), to the trapezium and metacarpal I according to Church (1861–1862), Hartmann (1886), Beddard (1893), Kohlbrügge (1897), Straus (1941a,b), Aziz & Dunlap (1986) and to our dissections, to the trapezium and the scaphoid according to Fick (1895a,b), and to the metacarpal I according to Kallner (1956). The insertion onto the trapezium and metacarpal I represents the common condition for *Pongo* according to Gibbs (1999), and according to the review of the literature done by Straus (1941a,b) an insertion onto the proximal phalanx of the thumb occurs in no orangutans. Regarding *Pan*, the insertion is onto the metacarpal I, sesamoid and trapezium according to Hepburn (1892), Dwight (1895) and Sonntag (1923), to the scaphoid and metacarpal I according to Humphry (1867), to the sesamoid, scaphoid and metacarpal I according to Ziegler (1964), and to the metacarpal I and trapezium according to Vrolik (1841), Wyman (1855), Wilder (1862), Huxley (1864), Champneys (1872), Hartmann (1886), Beddard (1893), Sutton (1883), Gratiolet & Alix (1866), Macalister (1871), MacDowell (1910), Miller (1952), Ogihara et al. (2005), and to our dissections. An insertion onto the metacarpal I and trapezium is the common condition in *Pan* according to Gibbs (1999), and in the review of the literature done by Keith (1899) an extension to the proximal phalanx of the thumb was only found in one out of 20 *Pan*, while Sarmiento (1994) did not found such an extension in any of the two *Pan* specimens dissected by him, and in the review of the literature done by Sarmiento (1994) there was no such extension in 10 out of 10 *Pan*. Concerning *Gorilla*, the insertion is onto the metacarpal I and proximal phalanx according to Owen (1868), Chapman (1878), Bischoff (1880), Hepburn (1892), Pira (1913), Straus (1941a,b), and to our dissection of CMS GG1, onto the carpal/metacarpal region and the proximal phalanx according to Duckworth (1904), Kaneff (1980a,b) and Tuttle (1969), onto the trapezium, metacarpal I and proximal phalanx in the specimen of Raven (1950) and in one specimen plus one side of other specimen of Preuschoft (1965), onto the trapezium, metacarpal I and metacarpophalangeal jointo of the thumb on one side of one specimen plus in one other specimen of Preuschoft (1965), onto the metacarpal I and trapezium/sesamoid bone according to Macalister (1873), to Hartmann (1886) and to our dissection of VU GG1, and onto the metacarpal I and the carpal region in the gorilla fetus dissected by Deniker (1885). An insertion onto the proximal phalanx of digit 1, trapezium and metacarpal I is the common condition in *Gorilla* according to Gibbs (1999), and in the review of the literature done by Keith (1899) this condition was found in four out of nine gorillas. Sarmiento (1994) found an extension to the proximal phalanx in one of the three gorillas dissected by him, but in the review of the literature done by him there was such an extension in nine out of 17 gorillas, while according to the review of the literature done by Straus (1941a,b) an insertion onto the proximal phalanx of the thumb occurs in 53% of gorillas. According to Gibbs (1999), in modern humans the abductor pollicis longus is commonly inserted onto the metacarpal I and trapezium, while the extensor pollicis brevis is usually inserted onto the proximal phalanx of the thumb. In the *Rattus* specimens dissected by us it is difficult to discern if the abductor pollicis longus extends distally to the proximal phalanx of the thumb, as described by Greene (1935), or not, as suggested by Jouffroy (1971). Also, it is difficult to discern if the 'extensor pollicis brevis' of *Cynocephalus* (*sensu* Leche, 1886), which inserts onto the proximal phalanx of the thumb, corresponds to part of the extensor pollicis longus or, instead, to part of the abductor pollicis longus *sensu* the present work (in this latter case this muscle would attach, in this taxon, onto the trapezium and the metacarpal I, as well as onto the distal phalanx of the thumb). Therefore, until more data is available, *Rattus* and *Cynocephalus* are coded as '?'.

166. *Extensor pollicis brevis is a distinct muscle (L 2, CI 50, RI 0).* Contrary to taxa of CS-0 [**0**], in modern humans and *Hylobates* [**1**] the extensor pollicis brevis is usually present as a distinct muscle. Apart from modern humans, within all the specimens of the taxa included in the cladistic analysis that were dissected by us and described in the literature, a clearly distinct extensor pollicis brevis, with a distinct muscular belly that is only partially blended, proximally, with the muscular belly of the abductor pollicis longus, is effectively only present in *Hylobates* (e.g. described by Bischoff, 1870, Kohlbrügge, 1890–1892; Duckworth, 1904; and Michilsens et al. 2009; and corroborated by our dissections, although Deniker, 1885 stated that he did not found a distinct extensor pollicis brevis in the gibbon fetus dissected by him). As explained above, some authors described an 'extensor pollicis brevis' and an 'abductor pollicis longus' in some primate

taxa other than hylobatids and modern humans. The name 'extensor pollicis brevis' has for instance often been used in descriptions of gorillas (e.g. Hepburn, 1892; Straus, 1941a,b; Raven, 1950; Preuschoft, 1965; Sarmiento, 1994), because in these primates a tendon of the abductor pollicis longus (*sensu* the present work) often inserts onto the proximal phalanx of the thumb, i.e. to the typical insertion point of the extensor pollicis brevis of modern humans (see character above). However, as stressed by Huxley (1864), Macalister (1873), Bischoff (1880), Deniker (1885), Tuttle (1970), Kaneff (1979, 1980a,b) and Aziz & Dunlap (1986), and corroborated by our dissections, in gorillas there is actually usually a single fleshy belly of the abductor pollicis longus that then gives rise to the so-called 'tendons of the extensor pollicis brevis and of the abductor pollicis longus', as is usually also the case in the hominoids *Pongo* and *Pan*. That is, contrary to *Homo* and *Hylobates*, in *Pongo*, *Pan* and *Gorilla* the extensor pollicis brevis is effectively usually not present as a separate muscle.